ROYAL ENFIELD GENUINE PARTS

Unit Construction Engine - Euro IV Models

FOREWORD

We are pleased to release this spare parts catalogue for the Unit Construction Engines for the Euro IV Regulation markets.

This Catalogue has been designed for identification of correct part number to help in ordering Spare Parts.

The illustration of the various parts are not to scale and is intended to serve only as a means of identification of the component for its shape and relative location in its respective assembly.

Due to continuous improvements in the motorcycle, the part nos and / or illustrations are subject to change without prior notice. However the changes will be intimated through technical Service Bulletin subsequently and periodically which must be updated by you in the catalogue at your end.

The part numbers and description were correct at the time of printing. While extreme care is taken in publishing this catalogue. We shall not be held responsible for any errors/omissions or wrong interpretations and consequent loss of any nature due to any of the above.

For enquiry, suggestions or feedback, please feel free to write to us

SERVICE HEADQUARTERS :

ROYAL ENFIELD

(A Unit of Eicher Motors Limited)

Thiruvottiyur High Road, Thiruvottiyur, Chennai - 600 019. India.

Tel : +91-44-4223 0400, Fax : +91-44-4201 1719. Website : www.royalenfield.com
E-mail : support@royalenfield.com

“ © Copyright 2016, Royal Enfield (A Unit of Eicher Motors Limited). All Rights Reserved. No part of this Spare Parts Catalogue shall be copied, distributed or otherwise dealt without the express permission in written from the Eicher Motors Limited, Royal Enfield Unit who remains the sole owner of this manual.”

Part No.888565 / Version 1.0 / Oct. 2016

For easy reference and quick identification, the parts are grouped into relevant categories as shown.

PICTORIAL ILLUSTRATION

Helps in identifying the shape of the part in its relative Assy..

01-45 KICK STARTER

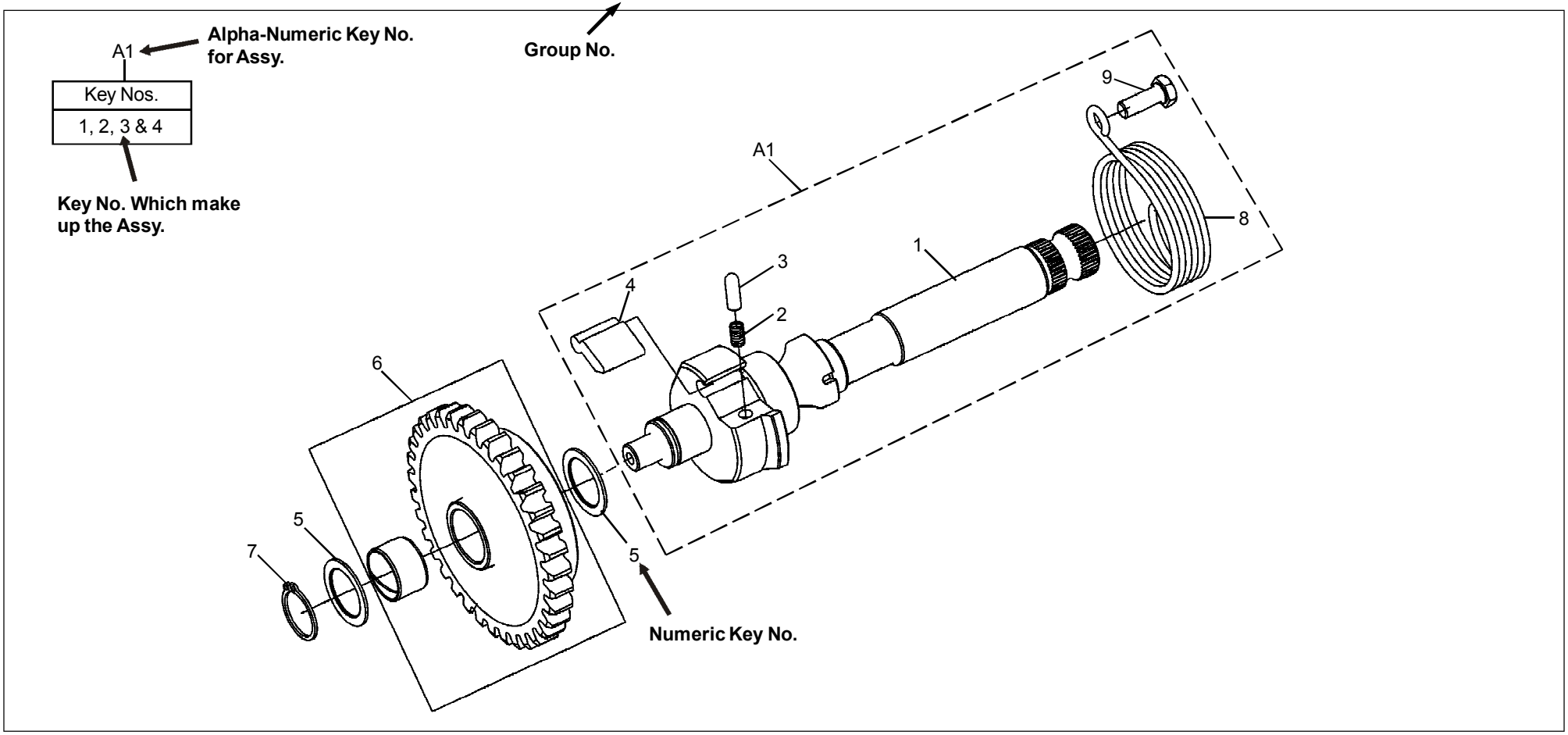

Part Number List

Key No.	Part Number	Description	Qty	BU EFI	Classic					Conti GT	Remarks
					500	Chr	DS	BG	SB		
1	2	3	4	5	6	7	8	9	10	11	12

1. KEY NUMBER (KEY NO.)

The numeric key number is provided to serve as the identification of the part with its part number.

Serviceable assemblies or kits in a particular group are identified by alpha-numeric key numbers. e.g. A1, A2 etc. In such cases, key numbers of Individual items or group number which make up such assembly / kit are given in illustration.

2. PART NUMBER

The Part number of the individual item, kit or the assembly is given in this column for unique identification.

Please refer column 5 to 11 for Model wise Applicability.

3. DESCRIPTION

The description of the part assigned to the individual item kit / assembly is mentioned in this column.

4. QUANTITY

The number of individual items, kits or assemblies required for one vehicle is mentioned here. Though quantity is indicated for oversize (O/S) or undersize (U/S) of some items, it is to be understood that for a vehicle the sizes only is applicable, depending upon the repair/matching requirements.

5-11. MODEL APPLICABILITY

The model for which the part is applicable is mentioned here by a “●” mark.

Bullet EFI (BU EFI)	Classic					Continental GT (Conti GT)
	500	(Chrome) Chr	(Desert Storm) DS	(Battle Green) BG	(Squadron Blue) SB	

12. REMARKS

Any specific applicability or additional information is mentioned here.

GROUP INDEX

Group No.	Description	Page No.
00-10	KIT PARTS	9
01-10	ENGINE ASSEMBLY	11
01-15	COVER LH	13
01-20	CRANKCASE LH - COVER SIDE	15
01-25	CLUTCH	19
01-30	CRANKCASE LH	21
01-35	CRANK SHAFT	23
01-40	GEAR TRAIN ASSEMBLY	25
01-45	KICK STARTER	27
01-50	CRANKCASE RH	29
01-55	CRANKCASE RH - COVER SIDE	33
01-60	GEAR SHIFT ASSEMBLY	37
01-65	COVER RH	39
02-00	PISTON, RINGS & CYLINDER BARREL	43
03-00	CYLINDER HEAD	45
04-00	FUEL INJECTION & SENSORS	49
05-00	PART NUMBER INDEX	52

GROUP INDEX - PICTORIAL

00-10 KITS INDEX

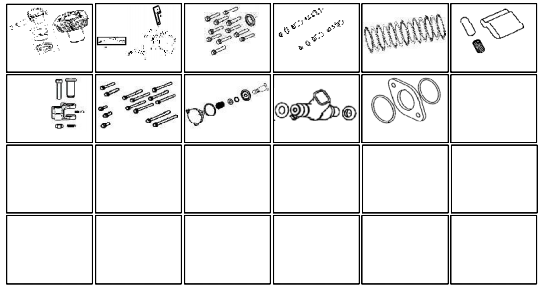

Page 8

01-10 ENGINE ASSEMBLY

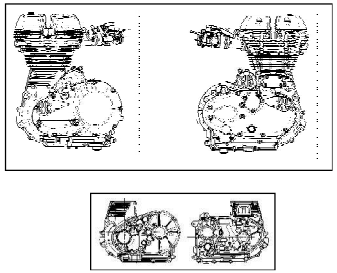

Page 10

01-15 COVER LH

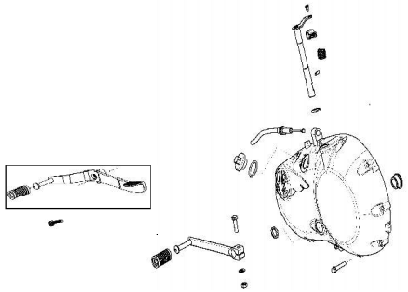

Page 12

01-20 CRANKCASE LH - COVER SIDE

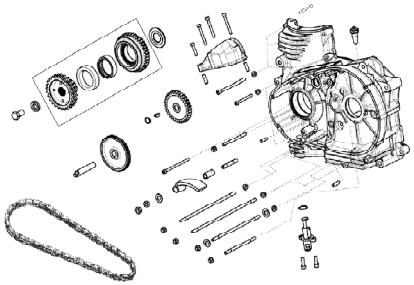

Page 14

01-25 CLUTCH

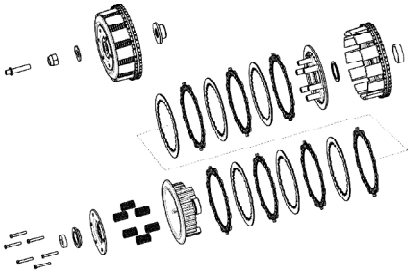

Page 18

01-30 CRANKCASE LH

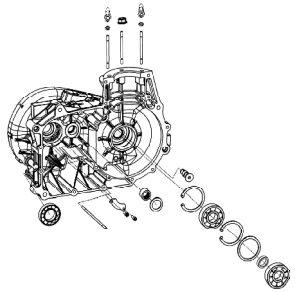

Page 20

01-35 CRANK SHAFT

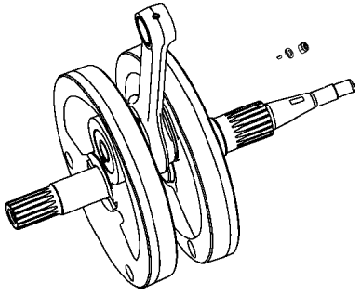

Page 22

01-40 GEAR TRAIN ASSEMBLY

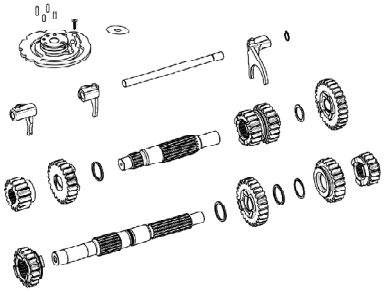

Page 24

01-45 KICK STARTER

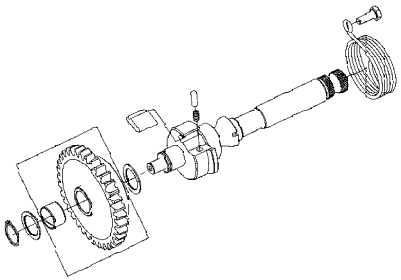

Page 26

GROUP INDEX - PICTORIAL

01-50 CRANKCASE RH

Page 28

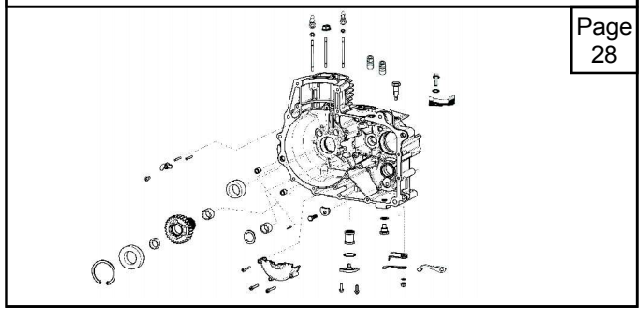

01-55 CRANKCASE RH - COVER SIDE

Page 32

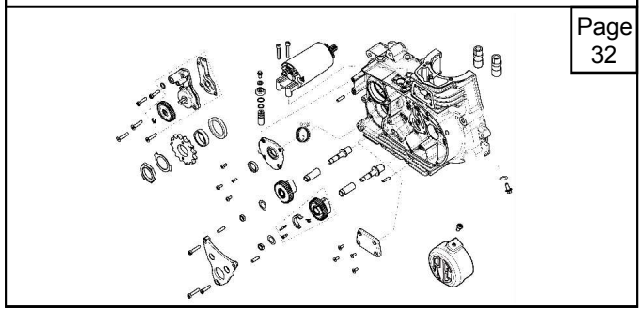

01-60 GEAR SHIFT ASSEMBLY

Page 36

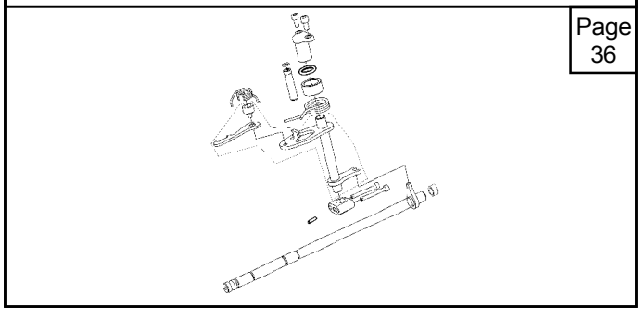

01-65 COVER RH

Page 38

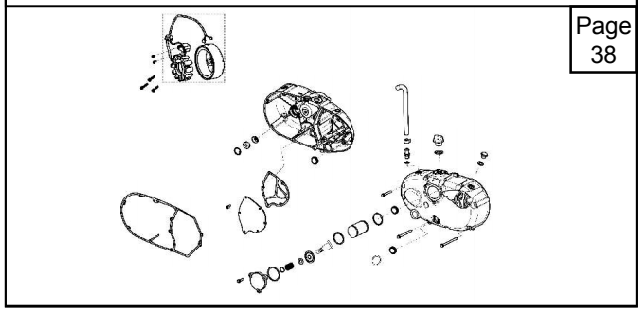

02-00 PISTON, RINGS & CYLINDER BARREL

Page 42

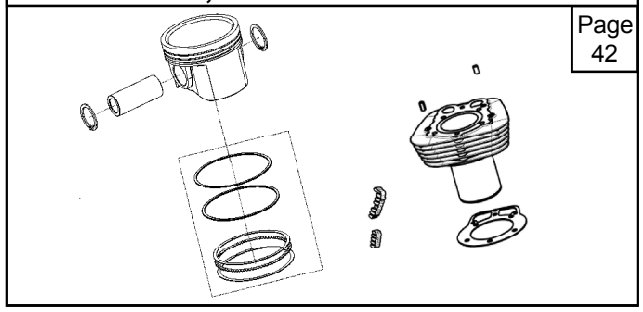

03-00 CYLINDER HEAD

Page 44

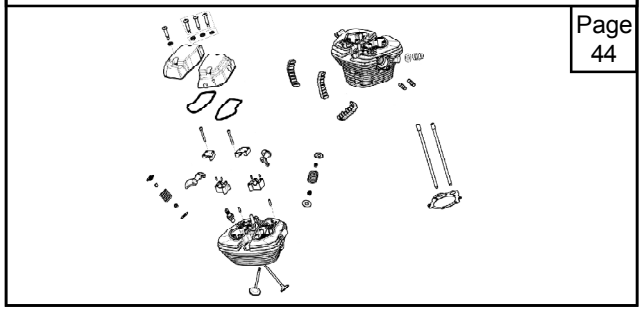

04-00 FUEL INJECTION & SENSORS

Page 48

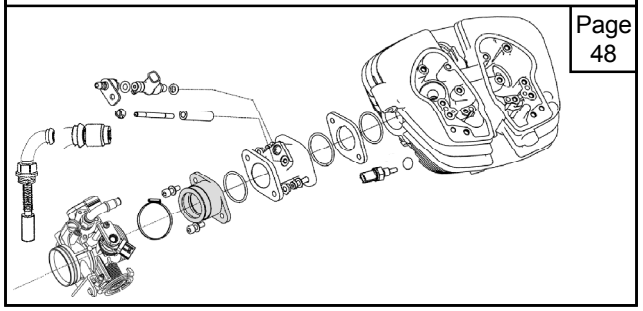

00-10 Kits Index Pictorial

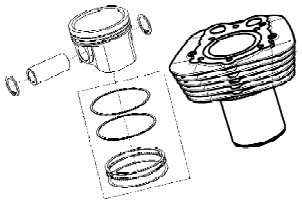

600005 - Cyl. & Piston Kit (500cc)
888291 - Cyl. & Piston Kit (535cc)

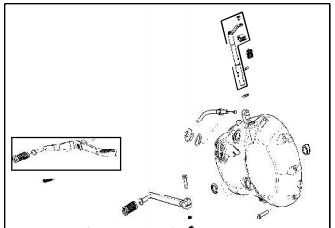

861030-Cover LH Sub-Assy. (500cc)
861070-Cover LH Sub-Assy. (535cc)

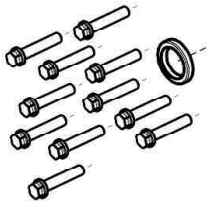

888115 - Bolt & Seal Kit
Crank Case Cover LH

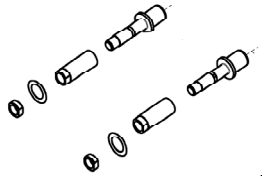

888180 - ECS Kit - 1st O/S
888181 - ECS Kit - 2nd O/S

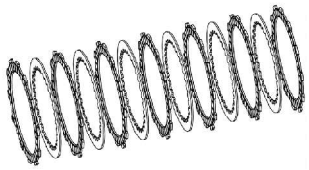

888102 - Clutch Plates Kit
(UCE 500 & 535cc)

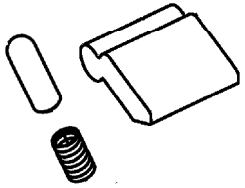

888182 - Kick Pawl, Plunger
and Spring Kit

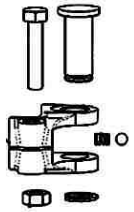

888101 - Kick Boss Repair Kit

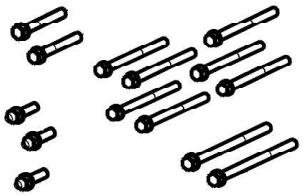

888112 - Bolt Repair Kit RH
Crankcase Cover

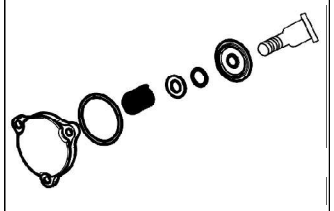

570878 - Cap, oil filter sub Assy. kit

571086 - Injector Kit Assy.

888183 - Insulator Kit (500cc)
888266 - Insulator Kit (535cc)

Key No.	Part Number	Description	Qty	BU EFI	Classic					Conti GT	Remarks
					500	Chr	DS	BG	SB		
1	600005	Cylinder barrel & piston W/Rings Assy - 500CC	1	●	●	●	●	●	●		
	888291	Cylinder barrel & piston W/Rings Assy - 535CC	1							●	
2	861030	Cover LH Sub-Assy.	1	●	●	●	●	●	●		
	861070	Cover LH Sub-Assy.	1							●	
3	888115	Bolt & Seal Kit Cover LH	1	●	●	●	●	●	●	●	
4	888180	Eccentric Cam Spindle Kit - 1st O/S	1	●	●	●	●	●	●	●	
	888181	Eccentric Cam Spindle Kit - 2nd O/S	1	●	●	●	●	●	●	●	
5	888102	Clutch plates kit	1	●	●	●	●	●	●	●	
6	888182	Kick Pawl, plunger & Spring kit	1	●	●	●	●	●	●	●	
7	888101	Kick Boss Repair Kit- Classic	1	●	●	●	●	●	●	●	
8	888112	Bolt Repair kit RH Crankcase Cover- Classic	1	●	●	●	●	●	●	●	
9	570878	Cap Oil Filter Sub Assembly	1	●	●	●	●	●	●	●	
10	571086	Injector Assy Kit	1	●	●	●	●	●	●	●	
11	888183	Insulator Kit	1	●	●	●	●	●	●		
	888262	Insulator Kit	1							●	

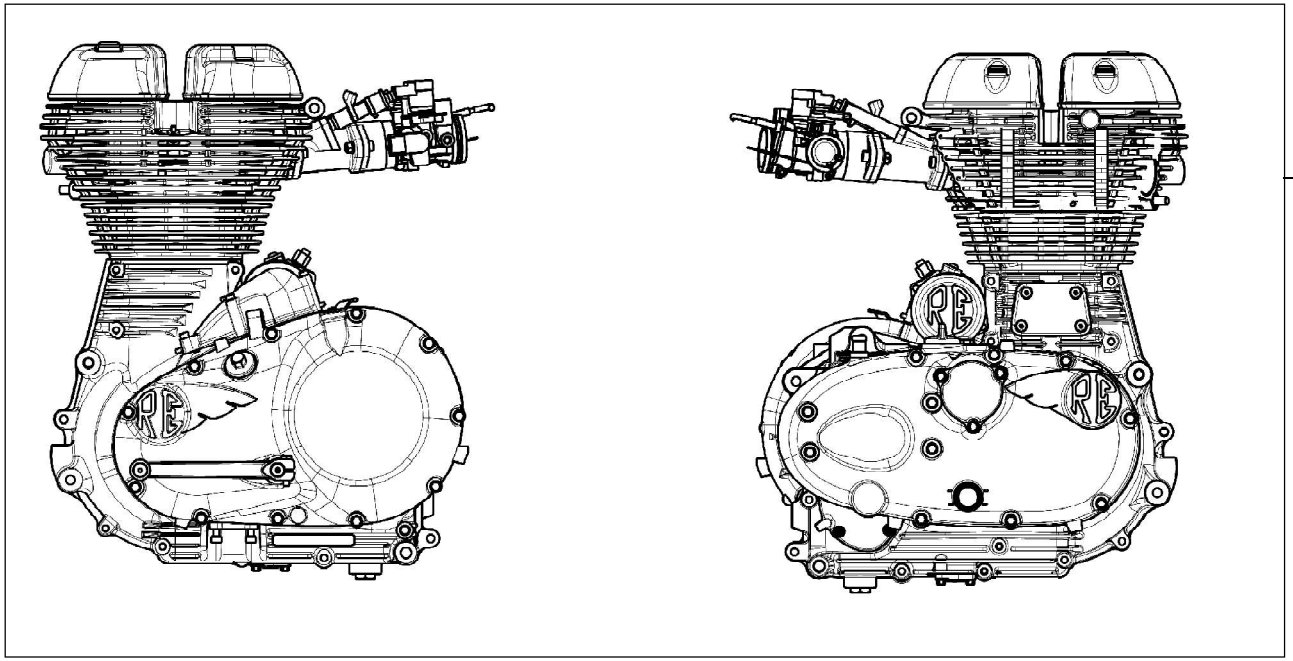

1

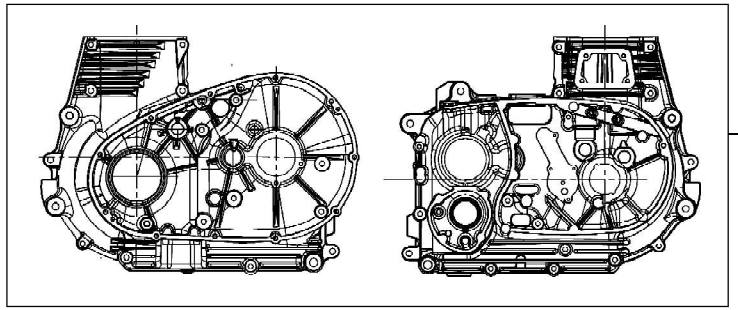

2

Key No.	Part Number	Description	Qty	BU EFI	Classic					Conti GT	Remarks
					500	Chr	DS	BG	SB		
1	866254	UCE Engine ES(500.16)-C5 Euro IV **Black**	1	●	●	●					
	873116	UCE Engine ES(500.16)-C5 Euro IV **Desert Storm**	1				●				
	825592	UCE Engine ES(500.16)-C5 Euro IV **Battle Green**	1					●			
	858070	UCE Engine ES(500.16)-C5 Euro IV **Squadron Blue**	1						●		
	859101	Engine UCE 535 Euro IV **Tex. Silver**	1							●	
2	888232	Crankcase LH & RH Assy. With Bearings	1	●	●	●	●	●	●		
	888290	Crankcase LH & RH Assy. With Bearings	1							●	

01-15 COVER LH

A1

Key Nos.
1, 8, 9, 10, 12 to 15

A2

Key Nos.
2 (11 Nos.) & 8

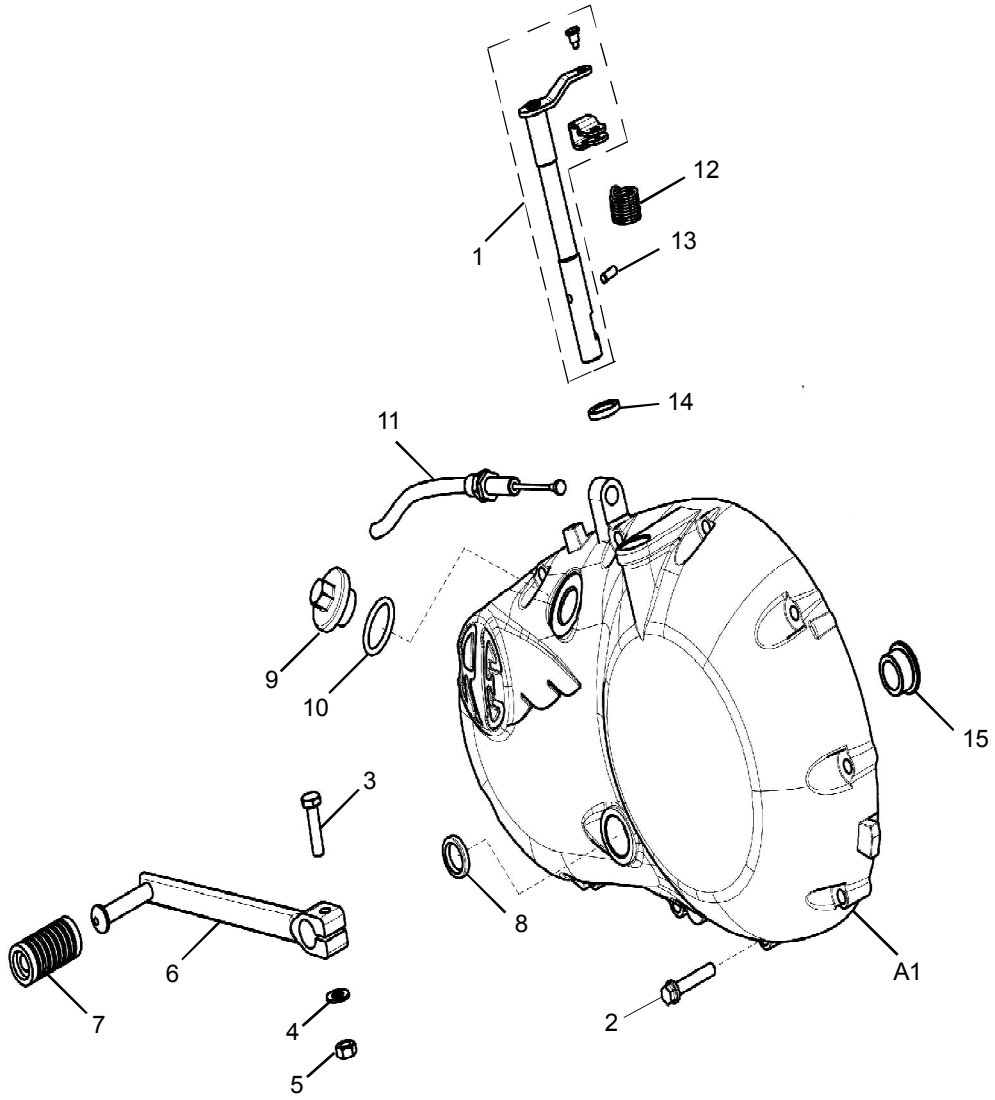

01-15 COVER LH

Key No.	Part Number	Description	Qty	BU EFI	Classic					Conti GT	Remarks
					500	Chr	DS	BG	SB		
A1	861029	Cover LH Sub-Assy.	1	●	●	●	●	●	●	●	
A2	888115	Bolt & Seal Kit Cover LH	1	●	●	●	●	●	●	●	
1	573925/a	Clutch Operating Lever And Clevis Assy.	1	●	●	●	●	●	●	●	
2	572015/a	Hex Flange Bolt M6 X 1 X 30	11	●	●	●	●	●	●	●	
3	572015/a	Hex Flange Bolt M6 X 1 X 30	1	●	●	●	●	●	●	●	
	570030	Hex. Socket Hd. Cap Screw,M6 X 20	1	●	●	●	●	●	●	●	
4	586032/a	Punched Washer	1	●	●	●	●	●	●	●	
5	586021/a	Hex Nut M6 X 1 X 7	1	●	●	●	●	●	●	●	
6	550103/a	Gear Lever Assy	1	●	●	●	●	●	●	●	
7	146640/a	Sleeve, Gear Lever	1	●	●	●	●	●	●	●	
8	572371/a	Oil Seal	1	●	●	●	●	●	●	●	
9	502018/b	Oil Filler Plug	1	●	●	●	●	●	●	●	
10	502019/a	‘O’ Ring (Plug)	1	●	●	●	●	●	●	●	
11	571156/d	Clutch Cable Assy.	1	●	●	●	●	●	●	●	
12	570452/e	Spring, Clutch Op Lever	1	●	●	●	●	●	●	●	
13	550075/a	Roller	1	●	●	●	●	●	●	●	
14	570407	Oil Seal, Clutch Operating Lever-G12X18X5	1	●	●	●	●	●	●	●	
15	550061/c	Bush	1	●	●	●	●	●	●	●	

01-20 CRANK CASE LH - COVER SIDE

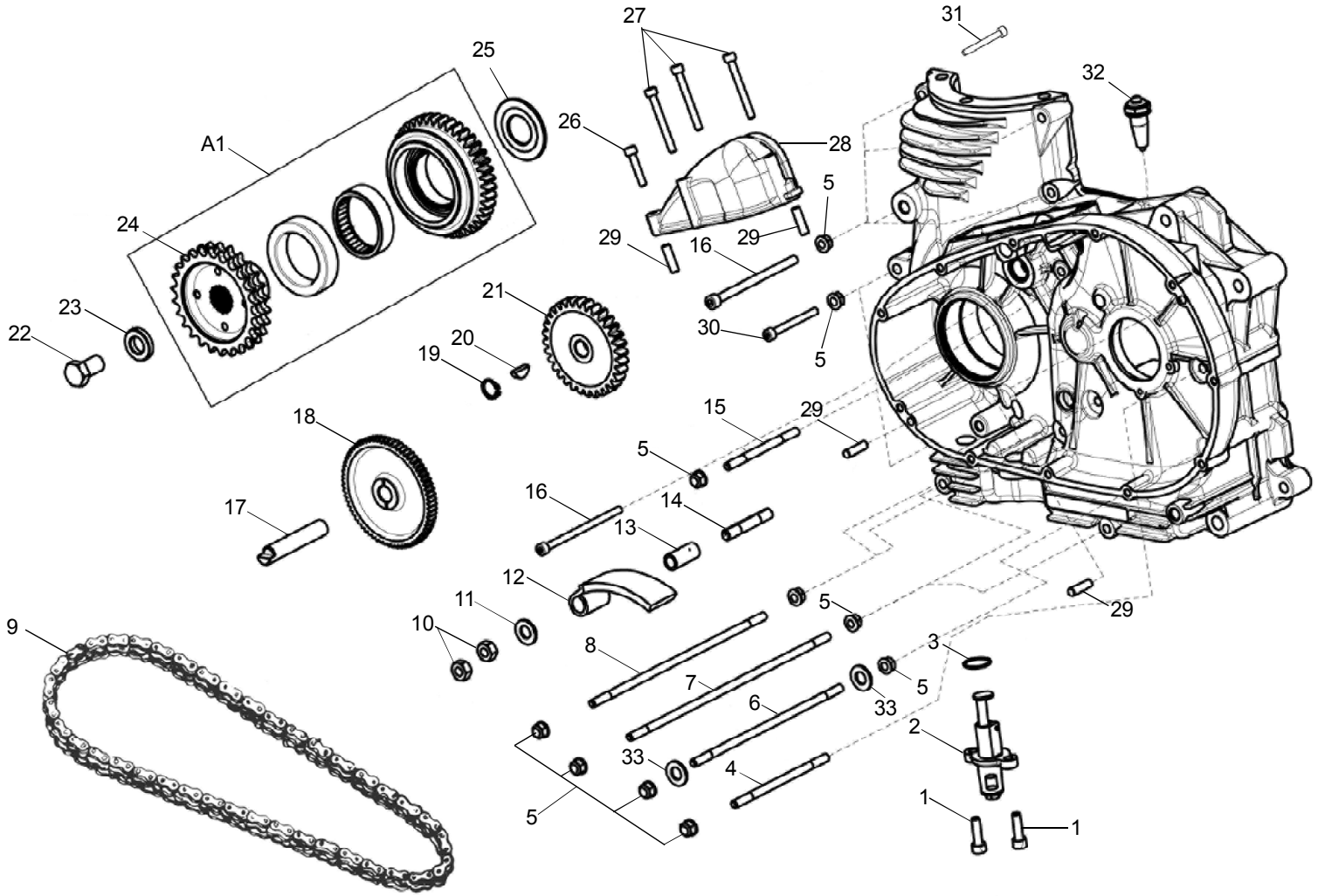

01-20 CRANK CASE LH - COVER SIDE

Key No.	Part Number	Description	Qty	BU EFI	Classic					Conti GT	Remarks
					500	Chr	DS	BG	SB		
A1	592593/a	Sprag Clutch Assy	1	●	●	●	●	●	●	●	
1	570030	Hex. Socket Hd. Cap Screw, M6 X 20	2	●	●	●	●	●	●	●	
2	570047/e	Auto Chain Tensioner Assy.	1	●	●	●	●	●	●	●	
3	570295/a	O-Ring, Chain Tensioner	1	●	●	●	●	●	●	●	
4	570090/d	Stud 106L	1	●	●	●	●	●	●	●	
5	593090/c	Nut M6X1, Flange Nyloc Type	22	●	●	●	●	●	●	●	
6	570088/d	Stud 168L	1	●	●	●	●	●	●	●	
7	570089/d	Stud 196L	1	●	●	●	●	●	●	●	
8	570086/d	Stud 226L	2	●	●	●	●	●	●	●	
9	570951/a	Primary Chain	1	●	●	●	●	●	●	●	
10	586084/a	Flanged U Nut M8X1.25	2	●	●	●	●	●	●	●	
11	140293/1	Plain Washer- CT Pad	1	●	●	●	●	●	●	●	
12	141246/c	Bush, CT Pad	1	●	●	●	●	●	●	●	
13	570029/d	Chain Tensioner Pad	1	●	●	●	●	●	●	●	
14	571221/a	Stud - Chain Tensioner Pad	1	●	●	●	●	●	●	●	
15	570091/a	Stud M6 X 80L	1	●	●	●	●	●	●	●	
16	570130	Hex. Socket Hd. Cap Screw,M6 X 85	2	●	●	●	●	●	●	●	
17	570072/d	Shaft, Double Gear	1	●	●	●	●	●	●	●	
18	570570/c	Double Gear Assy	1	●	●	●	●	●	●	●	
19	570032	Circlip, 12X1N (For Shaft)	1	●	●	●	●	●	●	●	
20	500635/a	Key - Jack Shaft	1	●	●	●	●	●	●	●	
21	570007/f	Idler Gear - Jack Shaft	1	●	●	●	●	●	●	●	
22	571216/b	Hex Flange Screw M12X1.25X25	1	●	●	●	●	●	●	●	
23	570063/f	Washer, M12 - Thick 5 mm	2	●	●	●	●	●	●	●	

01-20 CRANK CASE LH - COVER SIDE

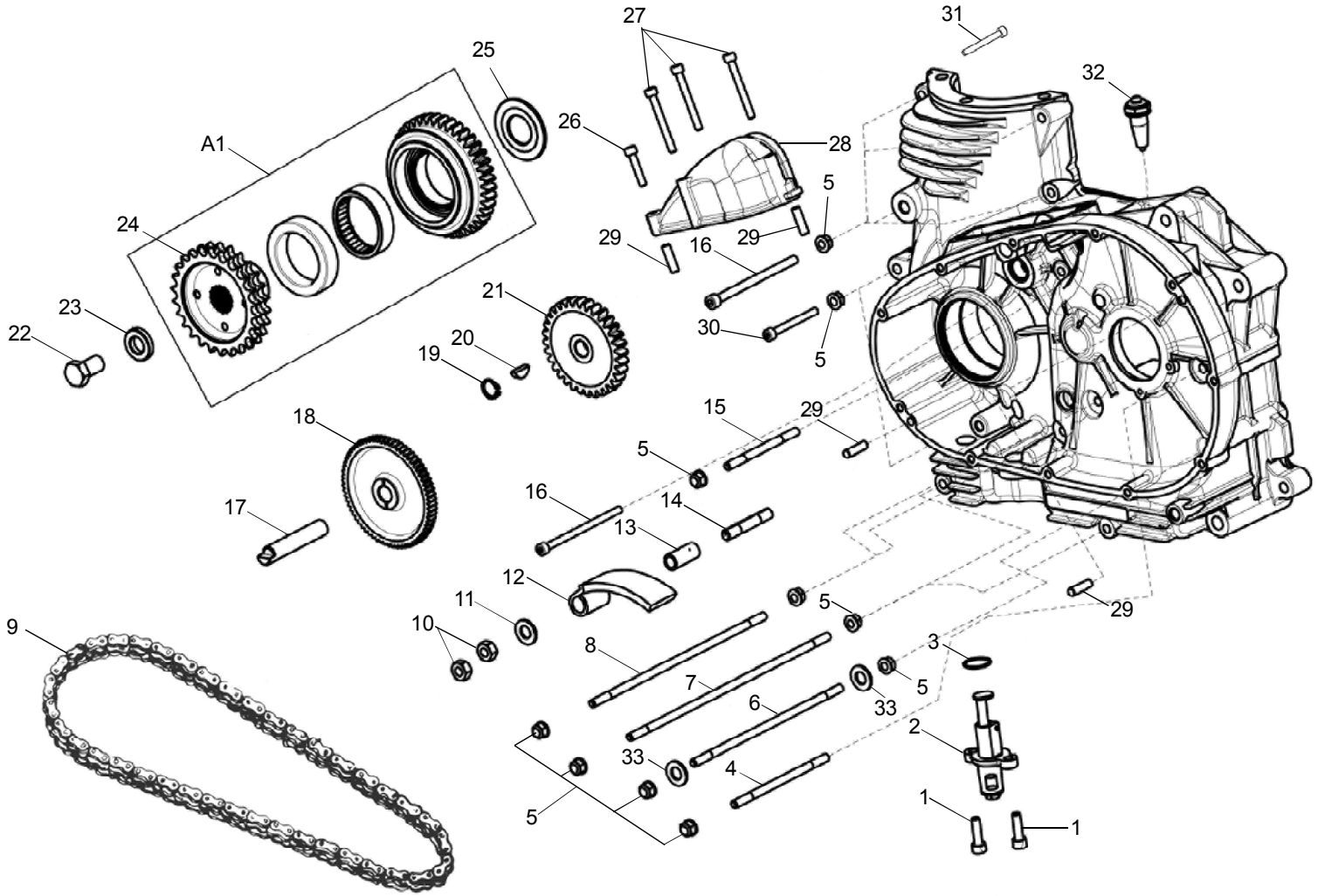

01-20 CRANK CASE LH - COVER SIDE

Key No.	Part Number	Description	Qty	BU EFI	Classic					Conti GT	Remarks
					500	Chr	DS	BG	SB		
24	570551/e	Engine Sprocket	1	●	●	●	●	●	●	●	
25	570074/i	Distance Washer ,Sprag Clutch	1	●	●	●	●	●	●	●	
26	570094	Hex. Socket Hd. Cap Screw,M5X25	1	●	●	●	●	●	●	●	
27	570016	Hex. Socket Screw,M5X45	3	●	●	●	●	●	●	●	
28	861003	Housing, Starter Drive- E Start	1	●	●	●	●	●	●	●	
29	570298/a	Dowel- 6 MM	4	●	●	●	●	●	●	●	
30	570024	Hex. Socket Screw,M6 X 50	2	●	●	●	●	●	●	●	
31	570025	Hex. Socket Screw,M6 X 90	4	●	●	●	●	●	●	●	
32	582510/a	Neutral switch with cable	1	●	●	●	●	●	●	●	
33	144636/a	Copper Washer M6 X 10	2	●	●	●	●	●	●	●	

01-25 CLUTCH

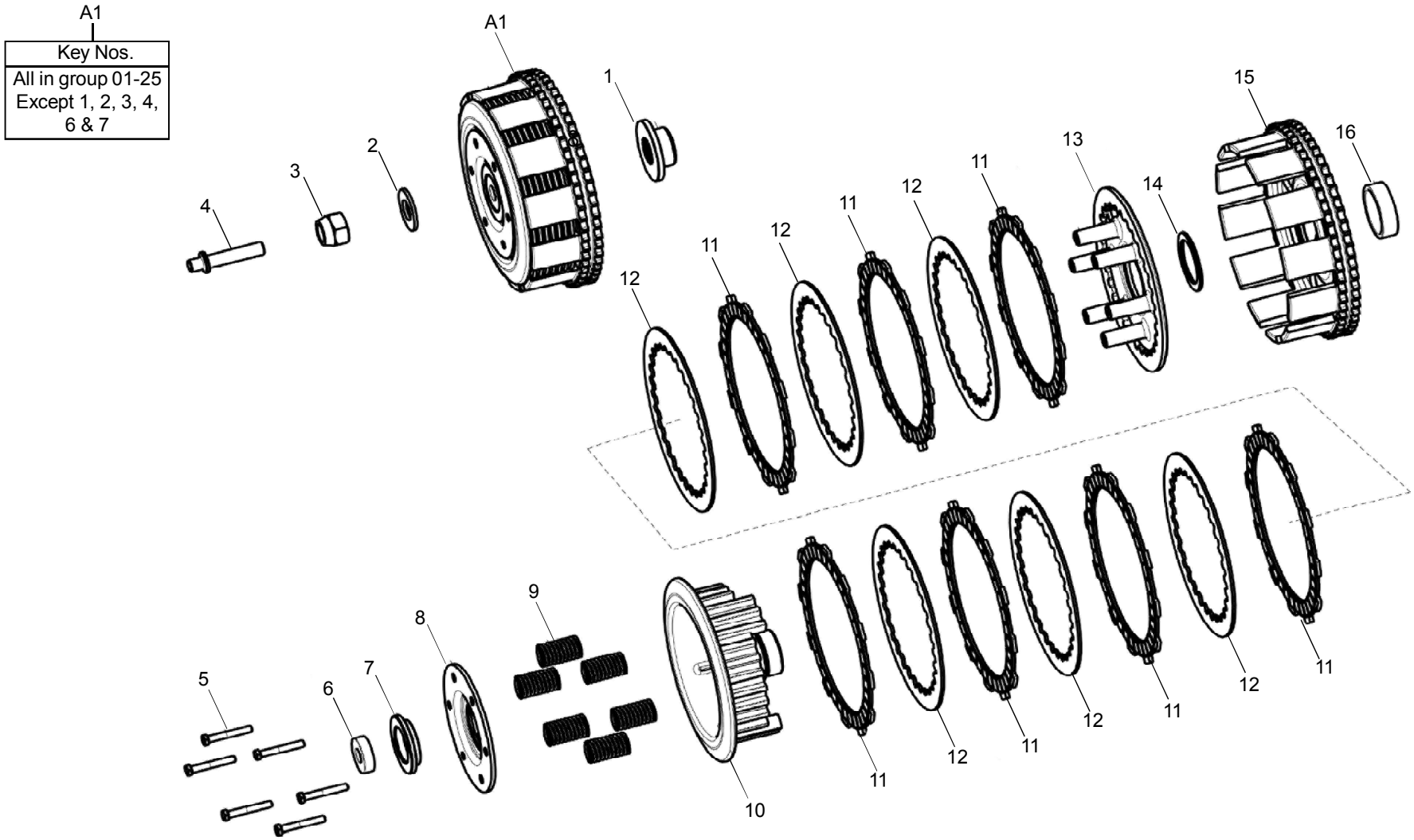
A1
Key Nos.
All in group 01-25 Except 1, 2, 3, 4, 6 & 7
A1
1
2
3
4
5
6
7
8
9
10
11
12
13
14
15
16

01-25 CLUTCH

Key No.	Part Number	Description	Qty	BU EFI	Classic					Conti GT	Remarks
					500	Chr	DS	BG	SB		
A1	571113/a	Clutch Assy Complete	1	●	●	●	●	●	●	●	
A2	888102	Clutch plates kit	1	●	●	●	●	●	●	●	
1	570249/h	Collar, Main shaft	1	●	●	●	●	●	●	●	
2	570465/c	Plain Washer	1	●	●	●	●	●	●	●	
3	593038/d	Hex Nut W/Nyloc insert M16X1.5	1	●	●	●	●	●	●	●	
4	570446/k	Clutch Push Pad	1	●	●	●	●	●	●	●	
5	570440	Hex Screw M6X1 X 35	6	●	●	●	●	●	●	●	
6	570442	Ball Bearing 6001, C3	1	●	●	●	●	●	●	●	
7	570447/b	Bearing Cup	1	●	●	●	●	●	●	●	
8	570439/b	Holder, Clutch Spring	1	●	●	●	●	●	●	●	
9	570438/b	Clutch Spring	6	●	●	●	●	●	●	●	
10	570434/d	Clutch Hub / Back Plate	1	●	●	●	●	●	●	●	
11	570436/c	Clutch Friction Plate	7	●	●	●	●	●	●	●	
12	570437/c	Clutch Plain Plate	6	●	●	●	●	●	●	●	
13	571100/a	Wheel Clutch- 7 plates Type	1	●	●	●	●	●	●	●	
14	570451/b	Thrust Washer	1	●	●	●	●	●	●	●	
15	570433/b	Clutch Drum / Sprocket	1	●	●	●	●	●	●	●	
16	570441	Needle Roller Bearing SCE 228	1	●	●	●	●	●	●	●	

01-30 CRANK CASE LH

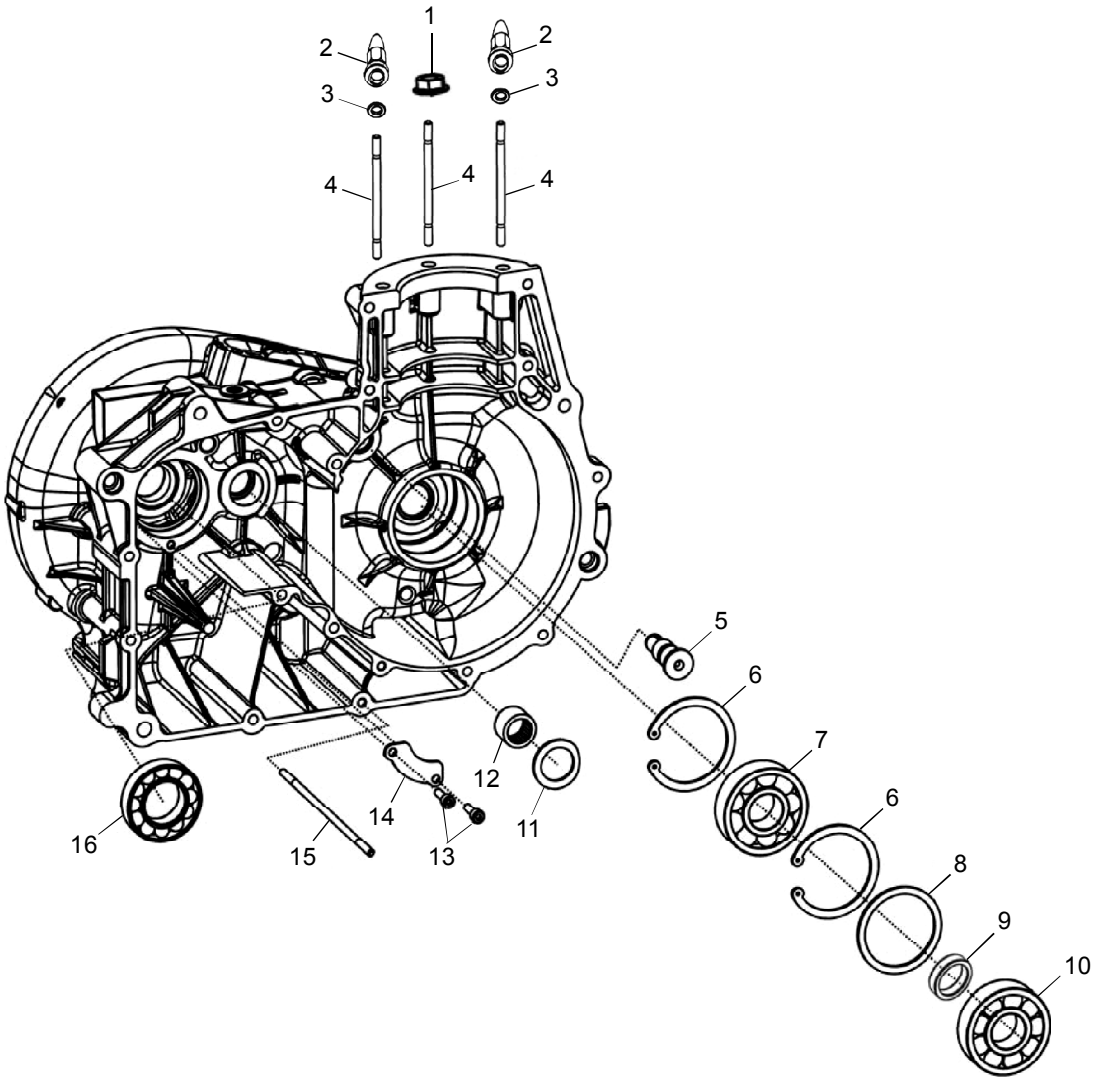

01-30 CRANK CASE LH

Key No.	Part Number	Description	Qty	BU EFI	Classic					Conti GT	Remarks
					500	Chr	DS	BG	SB		
1	586005/a	Flanged Hex. Nut M8X1.25	1	●	●	●	●	●	●	●	
2	570716/c	Nut-M8 -Cylinder Head	2	●	●	●	●	●	●	●	
3	570715/a	Copper Washer-M8	3	●	●	●	●	●	●	●	
4	500104/d	Stud, M8X128	3	●	●	●	●	●	●	●	
5	570008/k	Jack Shaft,	1	●	●	●	●	●	●	●	
6	110037/3	Drive Side Bearing Circlip 62 X 2N	2	●	●	●	●	●	●	●	
7	110050	Ball Bearing 6305 C3 (25X62X17)	1	●	●	●	●	●	●	●	
8	570006/e	Bearing Spacer, Crank Case LH	1	●	●	●	●	●	●	●	
9	570005/c	Bearing Spacer, Crankshaft LH	1	●	●	●	●	●	●	●	
10	571205/a	Nu305E Cylindrical Roller Bearing W/Cage	1	●	●	●	●	●	●	●	
11	570201/f	Washer, Thrust	1	●	●	●	●	●	●	●	
12	550032/a	Needle Bearing - Shaft Timing side	1	●	●	●	●	●	●	●	
13	570431/b	Hex Flange Bolt M5 X 0.8 X 16	2	●	●	●	●	●	●	●	
14	570012/c	Retainer Plate, Main shaft Bearing	1	●	●	●	●	●	●	●	
15	570087/d	Stud M6 X 133L	2	●	●	●	●	●	●	●	
16	570011	Ball Bearing, G/B Main Shaft 6006,C3	1	●	●	●	●	●	●	●	

01-35 CRANK SHAFT

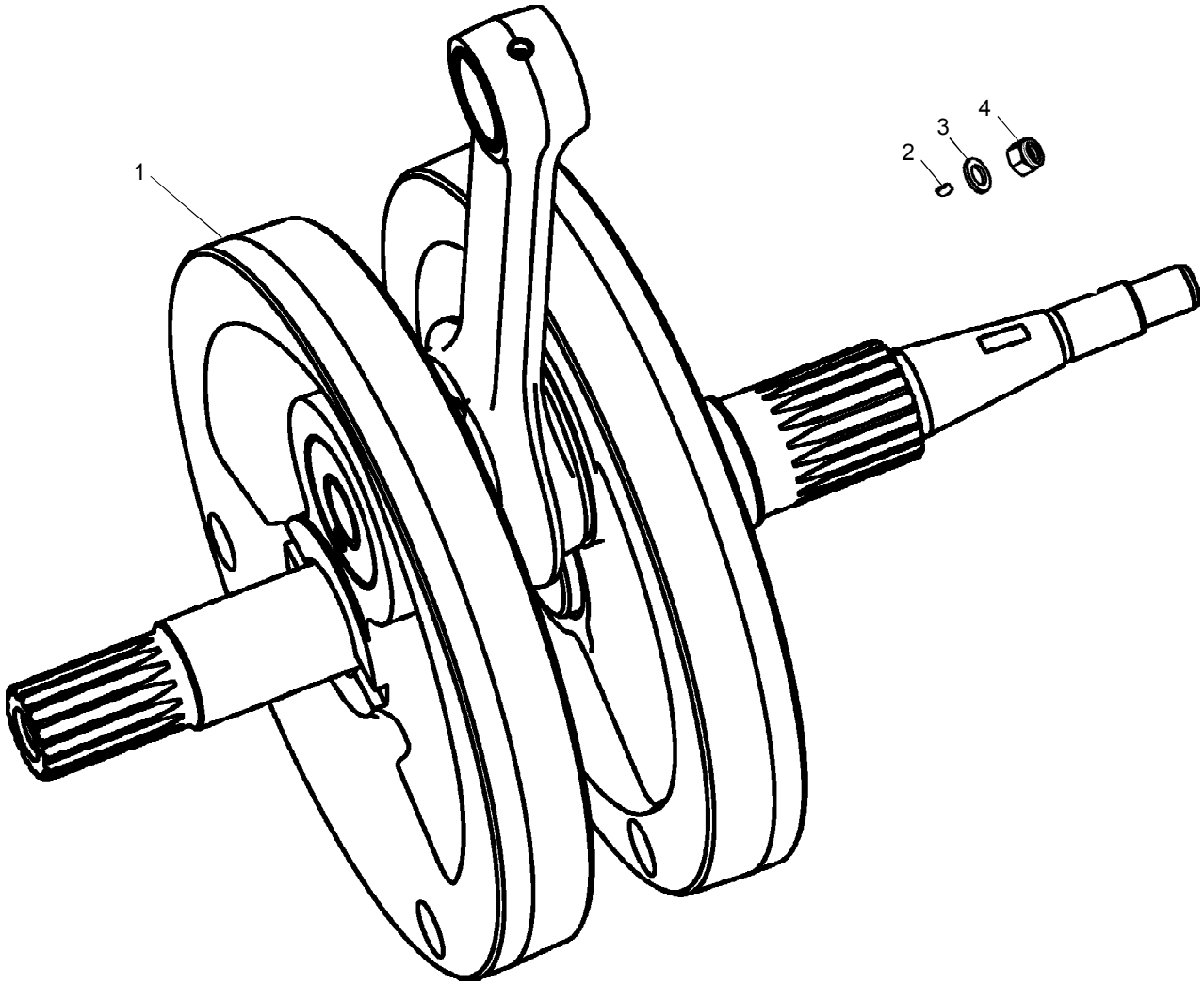

01-35 CRANK SHAFT

Key No.	Part Number	Description	Qty	BU EFI	Classic					Conti GT	Remarks
					500	Chr	DS	BG	SB		
1	571172/d	Crank Shaft Assy.	1	●	●	●	●	●	●		
	573033/a	Crank Shaft Assy.	1							●	
2	502070/a	Key	1	●	●	●	●	●	●	●	
3	586008/a	Plain Washer	1	●	●	●	●	●	●	●	
4	550025	Flange Hex Nyloc Nut M12	1	●	●	●	●	●	●	●	

01-40 GEAR TRAIN ASSEMBLY

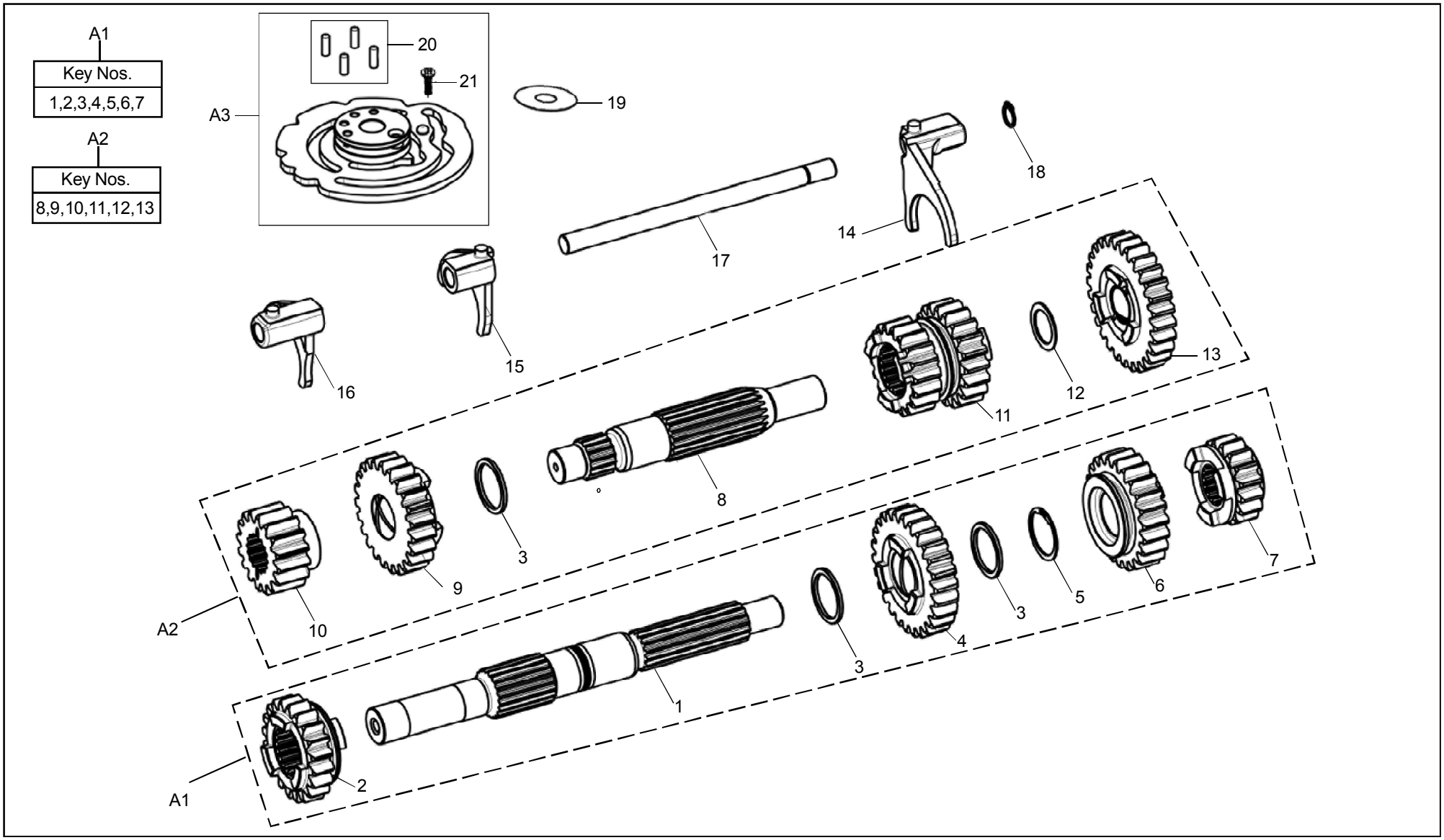

01-40 GEAR TRAIN ASSEMBLY

Key No.	Part Number	Description	Qty	BU EFI	Classic					Conti GT	Remarks
					500	Chr	DS	BG	SB		
A1	570158/b	Main Shaft Sub Assembly	1	●	●	●	●	●	●	●	
A2	570157	Lay Shaft Sub Assembly	1	●	●	●	●	●	●	●	
A3	570706/c	Cam plate Complete with Neutral Pin & Rollers	1	●	●	●	●	●	●	●	
1	570205/p	Main shaft	1	●	●	●	●	●	●	●	
2	550008/d	Main shaft 2nd Gear- 20 T	1	●	●	●	●	●	●	●	
3	550023/e	Washer, Thrust, Main & Lay Shaft	3	●	●	●	●	●	●	●	
4	570823/a	Assy, 4Th Gear Main Shaft with Bush	1	●	●	●	●	●	●	●	
5	550024	Circlip, External, Dia 24	1	●	●	●	●	●	●	●	
6	570821/a	Assy, 3rd Gear, Main Shaft with Bush	1	●	●	●	●	●	●	●	
7	570204/n	Main shaft 1st Gear	1	●	●	●	●	●	●	●	
8	550216/e	Lay shaft	1	●	●	●	●	●	●	●	
9	570596/b	Assy, Lay shaft 2nd Gear Assembly with Bush	1	●	●	●	●	●	●	●	
10	550007/e	Lay shaft High Gear	1	●	●	●	●	●	●	●	
11	550011/e	Lay shaft 3rd / 4Th Gear- 18/20 T	1	●	●	●	●	●	●	●	
12	550030/c	Washer, Thrust	1	●	●	●	●	●	●	●	
13	570202/e	Assy, Lay shaft 1st Gear with Bush	1	●	●	●	●	●	●	●	
14	550090/f	Selector Fork- Middle	1	●	●	●	●	●	●	●	
15	550081/f	Selector Fork	1	●	●	●	●	●	●	●	
16	550091/f	Selector Fork	1	●	●	●	●	●	●	●	
17	550078/a	Shaft, Selector Fork	1	●	●	●	●	●	●	●	
18	550141	Circlip 10N Selector Fork	1	●	●	●	●	●	●	●	
19	572044/a	Washer Special Cam Plate Assembly	1	●	●	●	●	●	●	●	
20	550075/a	Roller	4	●	●	●	●	●	●	●	
21	550119/b	Neutral Light Actuator Pin	1	●	●	●	●	●	●	●	

01-45 KICK STARTER

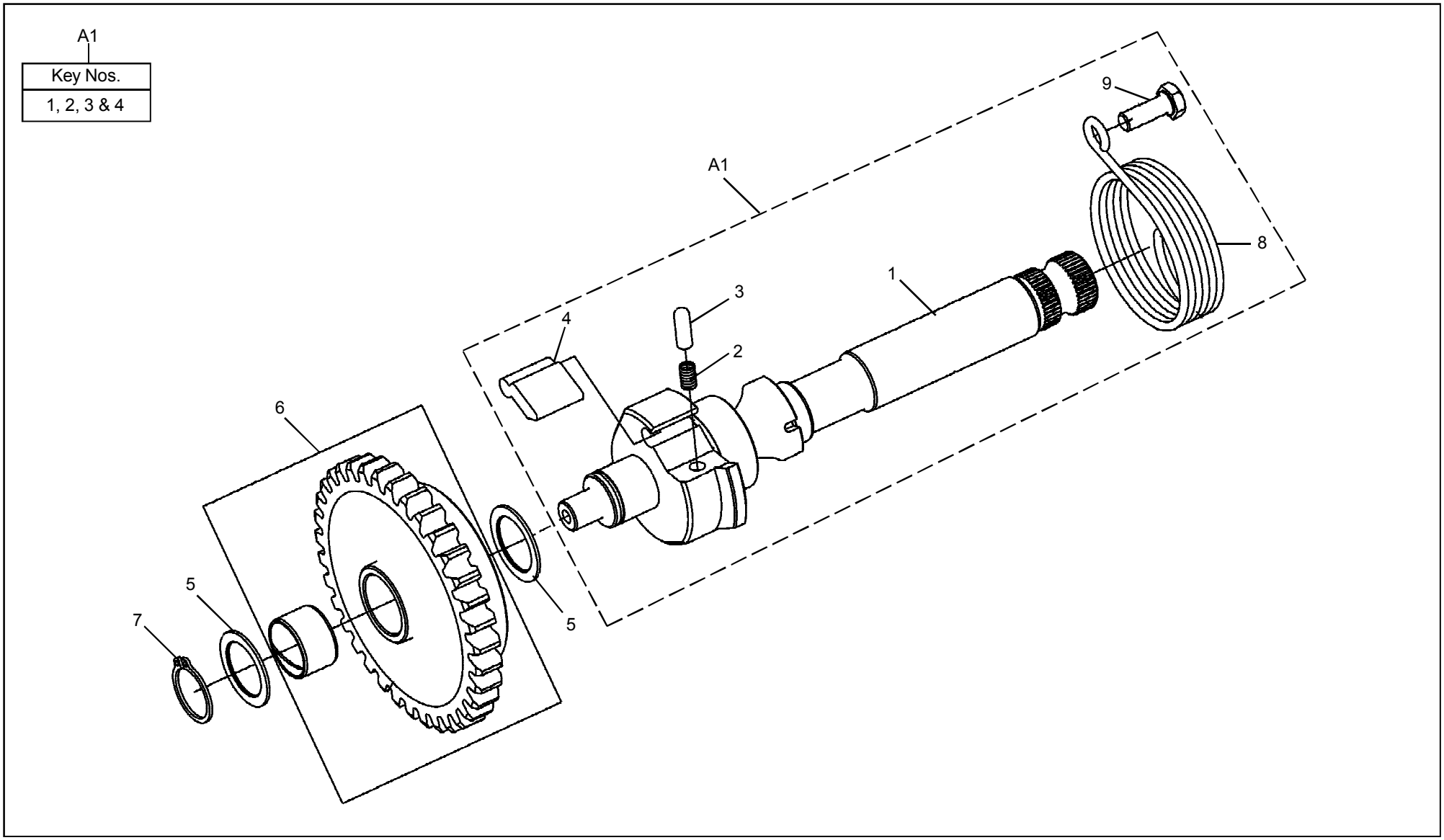

01-45 KICK STARTER

Key No.	Part Number	Description	Qty	BU EFI	Classic					Conti GT	Remarks
					500	Chr	DS	BG	SB		
A1	570805/b	Kickstart Shaft Sub Assembly	1	●	●	●	●	●	●	●	
A2	888182	Kick Pawl, Plunger & Spring kit	1	●	●	●	●	●	●	●	
1	570806/a	Kickstart Shaft	1	●	●	●	●	●	●	●	
2	140331/a	Spring	1	●	●	●	●	●	●	●	
3	140332/b	Plunger	1	●	●	●	●	●	●	●	
4	140333/b	Pawl, Kick	1	●	●	●	●	●	●	●	
5	550030/c	Washer, Thrust	2	●	●	●	●	●	●	●	
6	570248/e	Assy. Kickstart Gear, 35T	1	●	●	●	●	●	●	●	
7	570209	Circlip	1	●	●	●	●	●	●	●	
8	146450/b	Spring Kick	1	●	●	●	●	●	●	●	
9	570892/b	Flanged Hexagonal Bolt M6 X 1 X 16	1	●	●	●	●	●	●	●	

01-50 CRANK CASE RH

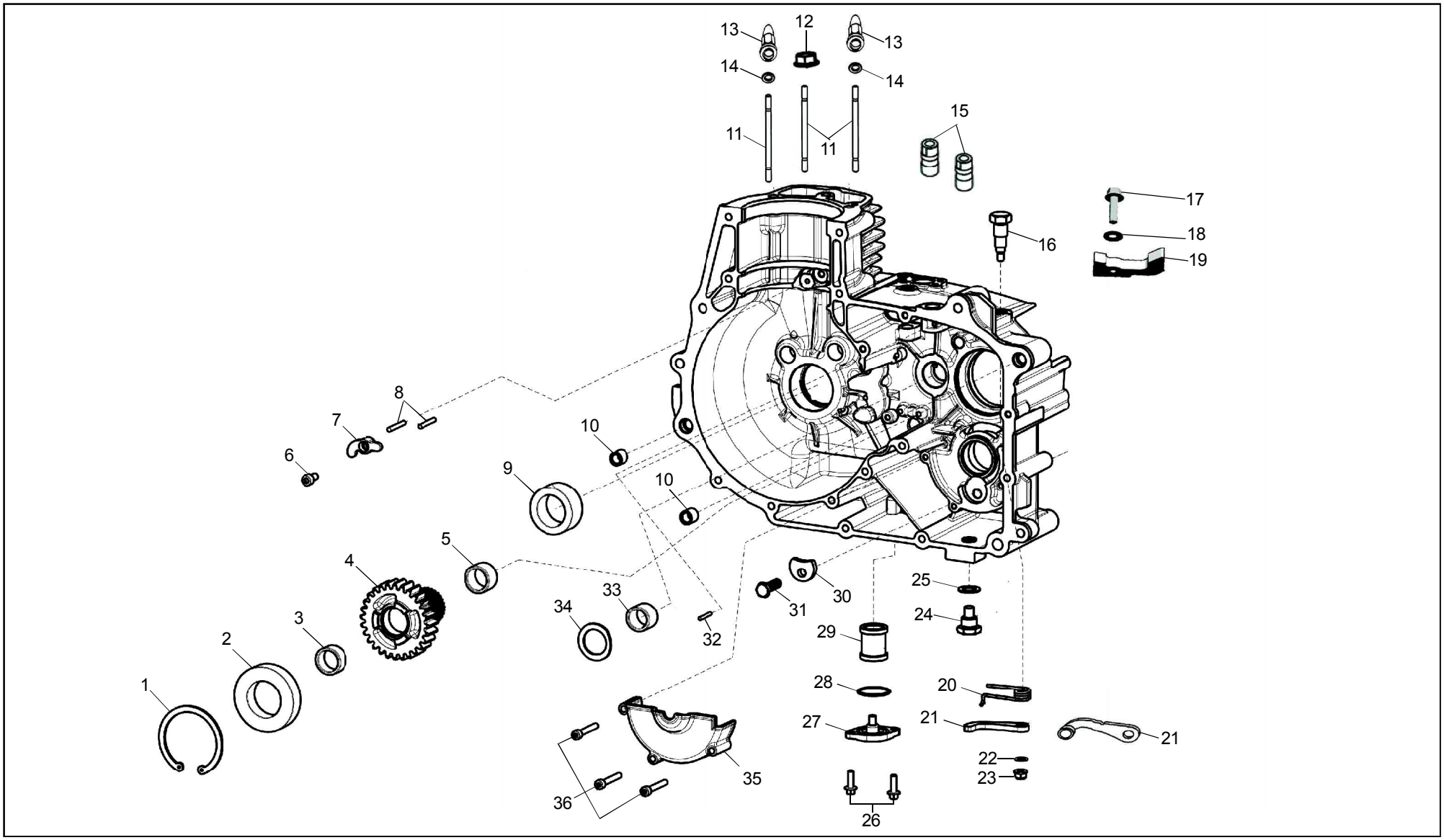

01-50 CRANK CASE RH

Key No.	Part Number	Description	Qty	BU EFI	Classic					Conti GT	Remarks
					500	Chr	DS	BG	SB		
1	110037/3	Circlip 62X2N	2	●	●	●	●	●	●	●	
2	570469/a	Deep Grove Ball Bearing 6007	1	●	●	●	●	●	●	●	
3	570207	Needle Bearing INA HK 2012	1	●	●	●	●	●	●	●	
4	570206/n	Sleeve Gear	1	●	●	●	●	●	●	●	
5	570208/b	Needle Bearing RH BK 2016	1	●	●	●	●	●	●	●	
6	570232	Hex. Socket Screw M6 X 12	1	●	●	●	●	●	●	●	
7	573028/a	Bracket-Pin-Hyd-Tappet	1	●	●	●	●	●	●	●	
8	571116/b	Needle Roller–Dia.4 X 29.8L(Lock pin Hyd. Tappet)	2	●	●	●	●	●	●	●	
9	570037	Needle Roller ‘Bearing 30X45X20-Shaft RH	1	●	●	●	●	●	●	●	
10	120005/b	Dowel - Hollow	2	●	●	●	●	●	●	●	
11	500104/d	Stud, M8X128	3	●	●	●	●	●	●	●	
12	586005/a	Flanged M8X1.25	1	●	●	●	●	●	●	●	
13	570716/c	Cap Nut-M8 X1.25 - Cyl Head	2	●	●	●	●	●	●	●	
14	570715/a	Copper Washer -M8	2	●	●	●	●	●	●	●	
15	570097/b	Hydraulic Valve Lifter (Tappet)	2	●	●	●	●	●	●	●	
16	570662/c	Stopper Bolt	1	●	●	●	●	●	●	●	
17	572338/b	Flanged Hex Bolt M6X1X20	1	●	●	●	●	●	●	●	
18	570666/a	Copper Washer M6	1	●	●	●	●	●	●	●	
19	570665/b	Plate-Anti Skip	1	●	●	●	●	●	●	●	
20	570663/c	Spring Shift Cam Plate Stopper	1	●	●	●	●	●	●	●	
21	570658/b	Stopper Assy-Shift Cam Plate	1	●	●	●	●	●	●	●	
22	570664/a	Washer- Shift Cam Plate Stopper	1	●	●	●	●	●	●	●	
23	570702/a	Hex Flange U Nut M6X1,	1	●	●	●	●	●	●	●	
24	570276/d	Magnetic Plug Assy	1	●	●	●	●	●	●	●	

01-50 CRANK CASE RH

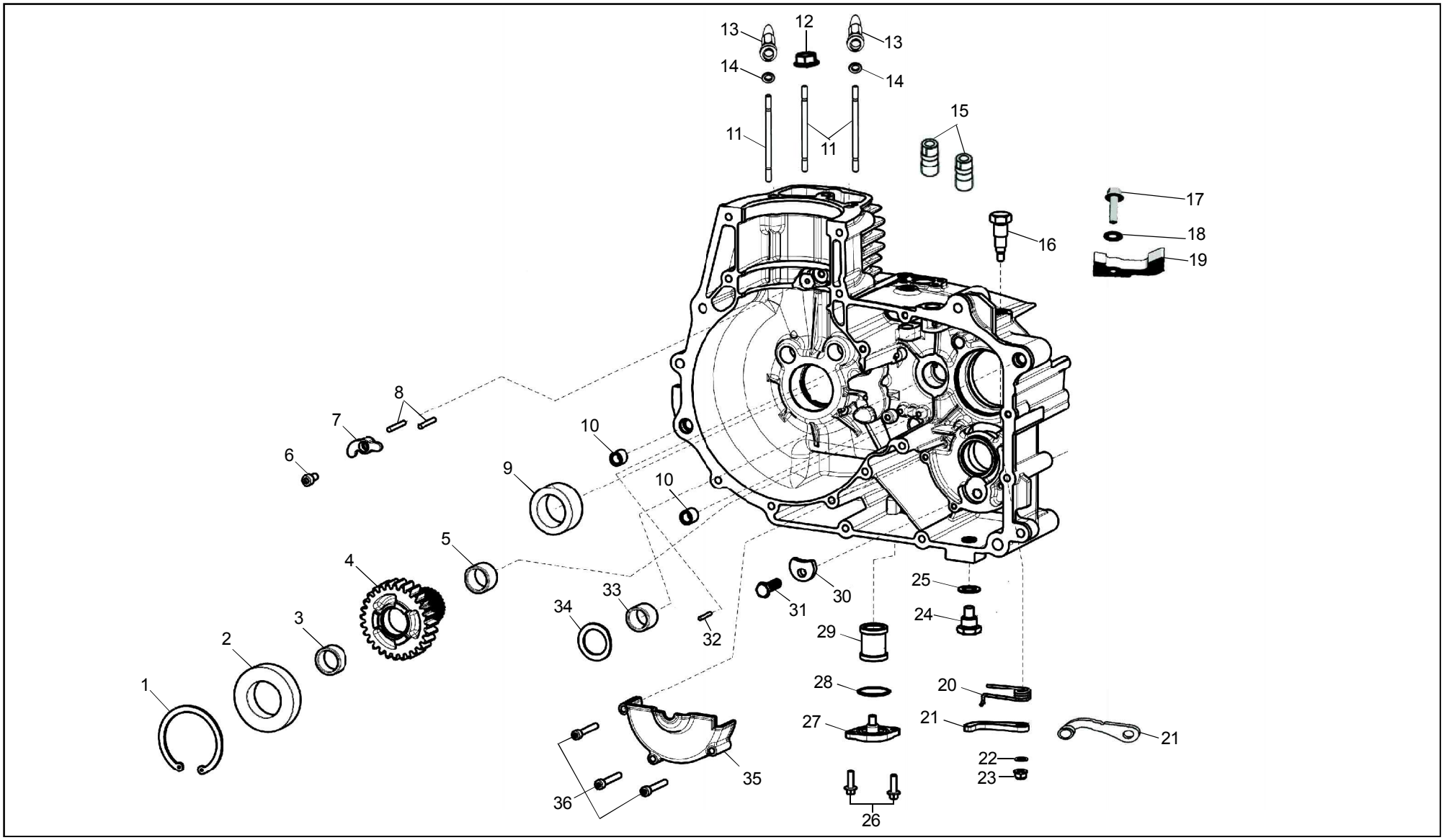

01-50 CRANK CASE RH

Key No.	Part Number	Description	Qty	BU EFI	Classic					Conti GT	Remarks
					500	Chr	DS	BG	SB		
25	144846/a	Copper Washer, Inspection Screw	1	●	●	●	●	●	●	●	
26	570431/b	Hex Flange Bolt M5 X 0.8 X 16	2	●	●	●	●	●	●	●	
27	570078/d	Sump Drain Cap Assy.	1	●	●	●	●	●	●	●	
28	570057/b	O Ring-Drain Cap	1	●	●	●	●	●	●	●	
29	570054/g	Suction Filter Assy	1	●	●	●	●	●	●	●	
30	142257/b	Stop Plate - KSS	1	●	●	●	●	●	●	●	
31	146714/a	Hex Screw M8 X 23	1	●	●	●	●	●	●	●	
32	570028	Locating Pin, (Pivot)-NRB 3X21.8	1	●	●	●	●	●	●	●	
33	550032/a	Needle Bearing	1	●	●	●	●	●	●	●	
34	570201/f	Washer, Thrust	1	●	●	●	●	●	●	●	
35	570239/c	Oil Trough	1	●	●	●	●	●	●	●	
36	570240/c	Hex. Socket Screw,M5 X 35	3	●	●	●	●	●	●	●	

01-55 CRANK CASE RH - COVER SIDE

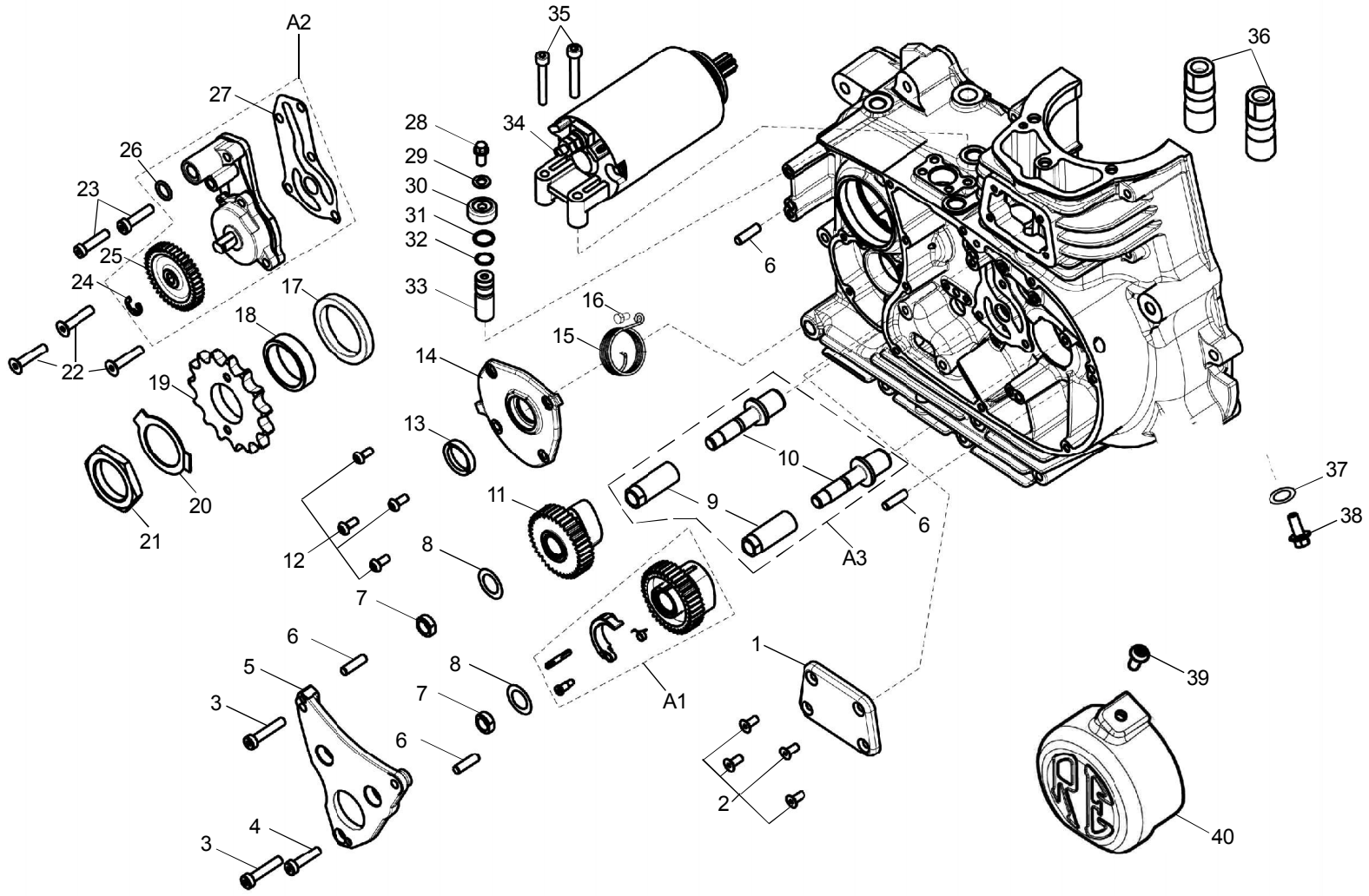

01-55 CRANK CASE RH - COVER SIDE

Key No.	Part Number	Description	Qty	BU EFI	Classic					Conti GT	Remarks
					500	Chr	DS	BG	SB		
A1	570309/b	Cam Gear Assy-Exhaust W/Decomp Assy.	1	●	●	●	●	●	●	●	
A2	571047/d	Oil Pump Assembly	1	●	●	●	●	●	●	●	
A3	888180	Eccentric Cam Spindle Kit - 1st O/S	1	●	●	●	●	●	●	●	
	888181	Eccentric Cam Spindle Kit - 2nd O/S	1	●	●	●	●	●	●	●	
1	572043/b	Tappet Door	1	●	●	●	●	●			
	573085/a	Tappet Door	1							●	
2	570198/c	Hex Socket CSK Head Screw M5 X 0.8 X 12	4	●	●	●	●	●	●	●	
3	570421/a	Hex. Socket Screw, M6 X 30	2	●	●	●	●	●	●	●	
4	570132/a	Hex. Socket Screw, M6 X 25	1	●	●	●	●	●	●	●	
5	570044/j	Cam Steady Plate	1	●	●	●	●	●	●	●	
6	570298/a	Dowel	4	●	●	●	●	●	●	●	
7	570100/b	Nut - Cam Spindle	2	●	●	●	●	●	●	●	
8	570280/b	Shim, Cam Gear	1	●	●	●	●	●	●	●	
9	570099/c	Cam Sleeve	2	●	●	●	●	●	●	●	
10	570040/d	Cam Spindle–Adjustable (0.1 Oversize)	2	●	●	●	●	●	●	●	
	570041/d	Cam Spindle–Adjustable (0.2 Oversize)	2	●	●	●	●	●	●	●	
11	571164/b	Cam Gear Assy. - Inlet	1	●	●	●	●	●	●	●	
12	570300/c	Hex Socket, Pan Head Screw, M5X12	4	●	●	●	●	●	●	●	
13	570241	Oil Seal Kick Starter G20X27X5 Double Lip	2	●	●	●	●	●	●	●	
14	884001	Cover, Kickstart Shaft- (Shot Blasting)	1	●	●	●	●	●	●	●	
15	146450/b	Spring	1	●	●	●	●	●	●	●	
16	570892/b	Flanged Hexagonal Bolt M6X1X16	1	●	●	●	●	●	●	●	
17	570213	Oil Seal Aeroquip Su 55X42X7 Double Lip	1	●	●	●	●	●	●	●	
18	570214/g	Distance Piece	1	●	●	●	●	●	●	●	

01-55 CRANK CASE RH - COVER SIDE

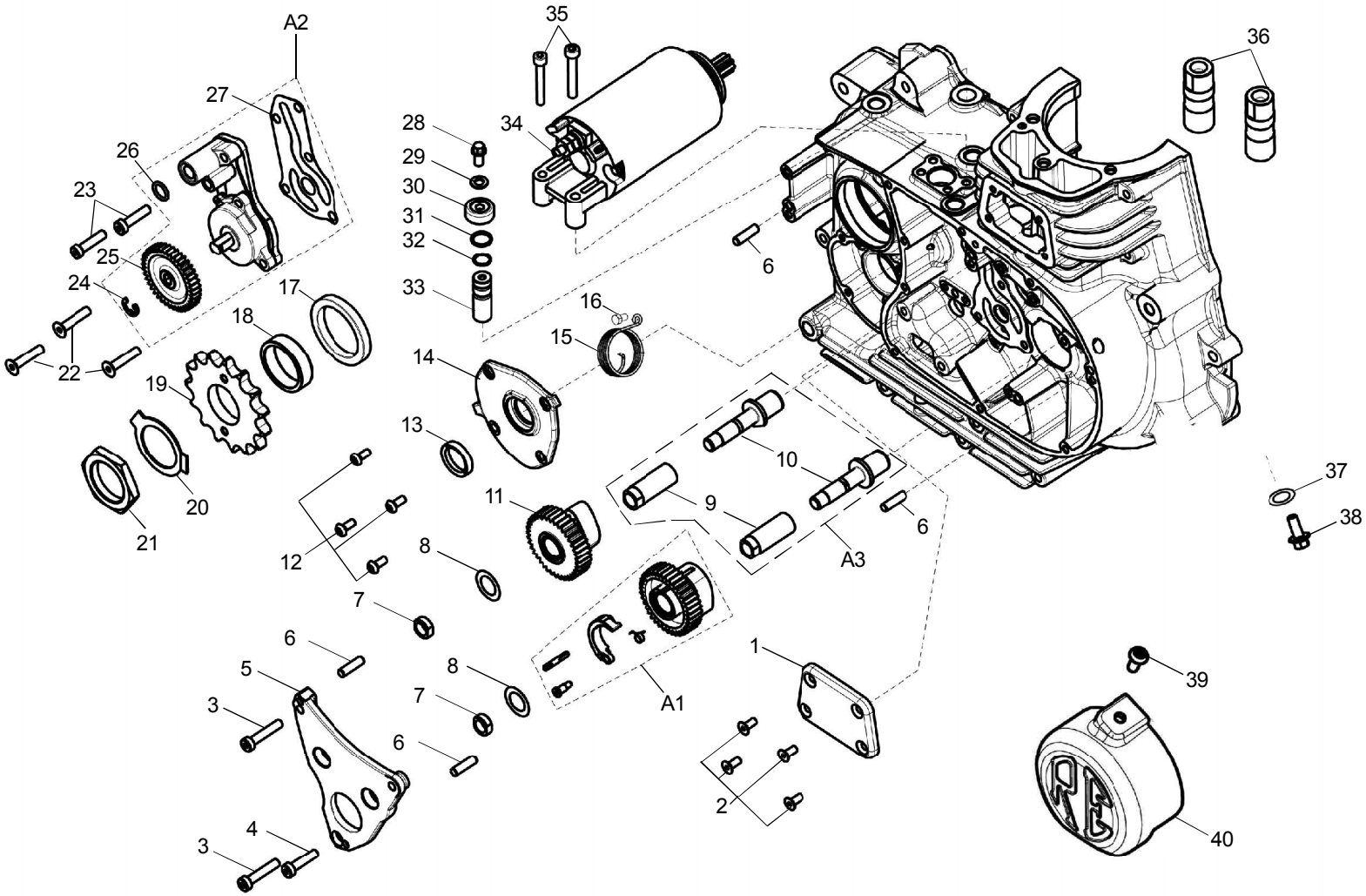

01-55 CRANK CASE RH - COVER SIDE

Key No.	Part Number	Description	Qty	BU EFI	Classic					Conti GT	Remarks
					500	Chr	DS	BG	SB		
19	571004/f	F D Sprocket 17T	1	●	●	●	●	●	●	●	
20	570247/d	Tab Washer	1	●	●	●	●	●	●	●	
21	570246/e	Nut, Sleeve Gear	1	●	●	●	●	●	●	●	
22	571155/a	Hex. Socket Screw, M6 X 30	3	●	●	●	●	●	●	●	
23	570132/a	Hex. Socket Screw, M6 X 25	2	●	●	●	●	●	●	●	
24	570052/a	Circlip Oil pump	1	●	●	●	●	●	●	●	
25	571166/b	Pump Drive Pinion	1	●	●	●	●	●	●	●	
26	570293	O-Ring, Oil Pump Outlet	1	●	●	●	●	●	●	●	
27	571115/c	Gasket, Oil pump	1	●	●	●	●	●	●	●	
28	570481	Hex Flange Bolt M5X12	1	●	●	●	●	●	●	●	
29	144636/a	Copper Washer M6 X 10	2	●	●	●	●	●	●	●	
30	570468/b	Cap, Pivot Pin	1	●	●	●	●	●	●	●	
31	146031/a	O-Ring-Cap, Pivot Pin	1	●	●	●	●	●	●	●	
32	550108	O' Ring Blk Nitrile Rubber	1	●	●	●	●	●	●	●	
33	570218/d	Pivot, Camplate	1	●	●	●	●	●	●	●	
34	560013	Starter Motor Assy – Denso	1	●	●	●	●	●	●	●	
35	570303/a	Mounting Allen Screw M6 X 60	2	●	●	●	●	●	●	●	
36	570097/b	Hydraulic Valve Lifter _ Roller	2	●	●	●	●	●	●	●	
37	144600/a	Copper Washer, Tap Petrol Cover, Oil drain	1	●	●	●	●	●	●	●	
38	570713	Hex Flange Bolt M8X12	1	●	●	●	●	●	●	●	
39	570300/c	Hex Soc Button Hd Screw M5 X 12	1	●	●	●	●	●	●	●	
40	572012/a	Cover Starter Motor	1	●	●	●	●	●	●	●	

01-60 GEAR SHIFTING

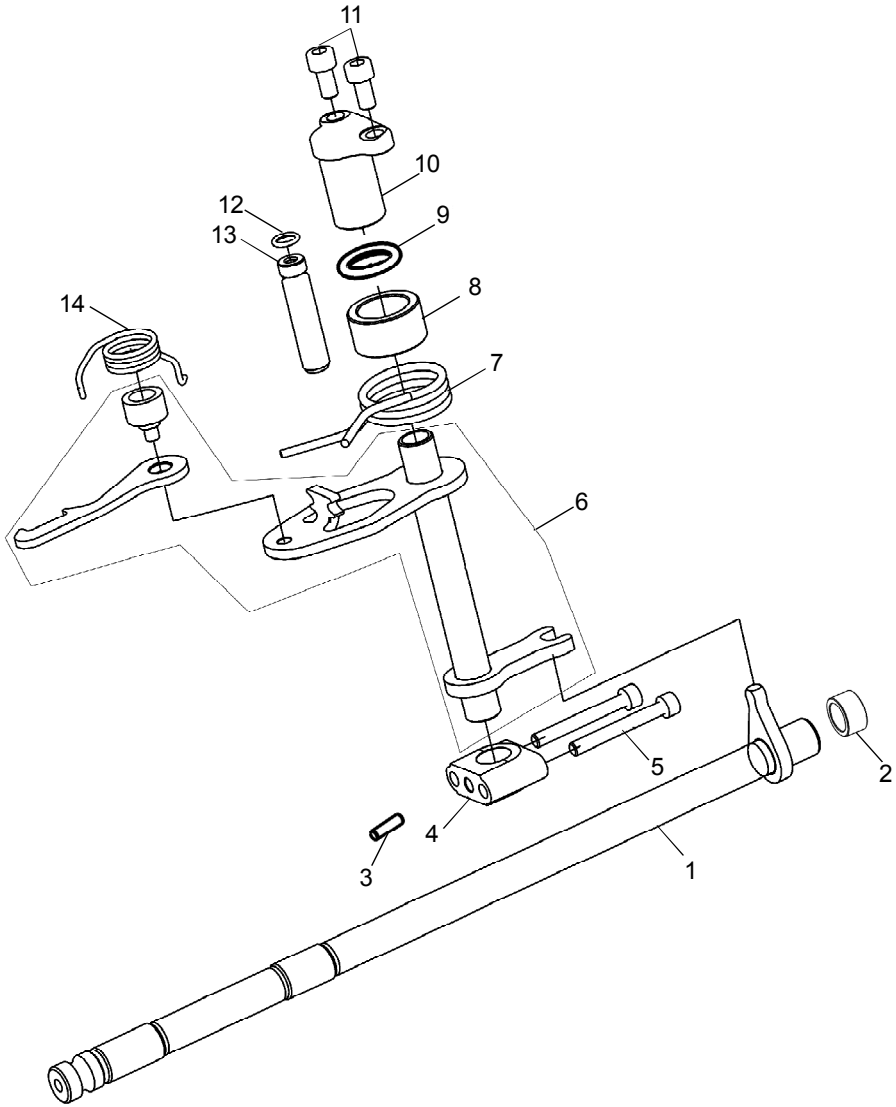

01-60 GEAR SHIFTING

Key No.	Part Number	Description	Qty	BU EFI	Classic					Conti GT	Remarks
					500	Chr	DS	BG	SB		
1	570219/g	Assembly, Gear Lever Shaft	1	●	●	●	●	●	●	●	
2	570184/b	Spacer - Shaft, Gear Lever	1	●	●	●	●	●	●	●	
3	570235/f	Dowel, Lower Pivot Bearing	1	●	●	●	●	●	●	●	
4	570231/h	Lower Pivot Bearing, Rocker Shaft	1	●	●	●	●	●	●	●	
5	570233/b	Hex. Socket Head Cap Screw, M5 X 40	2	●	●	●	●	●	●	●	
6	570643/a	Gear changer Assembly	1	●	●	●	●	●	●	●	
7	550072/b	Return Spring Gear Change	1	●	●	●	●	●	●	●	
8	570227/f	Spacer	1	●	●	●	●	●	●	●	
9	570234	O’ Ring Black Nitrile Rubber	1	●	●	●	●	●	●	●	
10	861035	Pivot Bearing, Rocker Shaft Upper (Buffed)	1	●	●	●	●	●	●	●	
11	570304/b	Hex. Socket Head Cap Screw, M6 X 16 SS	2	●	●	●	●	●	●	●	
12	550256/a	‘O’ Ring	1	●	●	●	●	●	●	●	
13	570229/d	Stop Pin	1	●	●	●	●	●	●	●	
14	570230/f	Spring, Gear Change Striker	1	●	●	●	●	●	●	●	

01-65 COVER RH

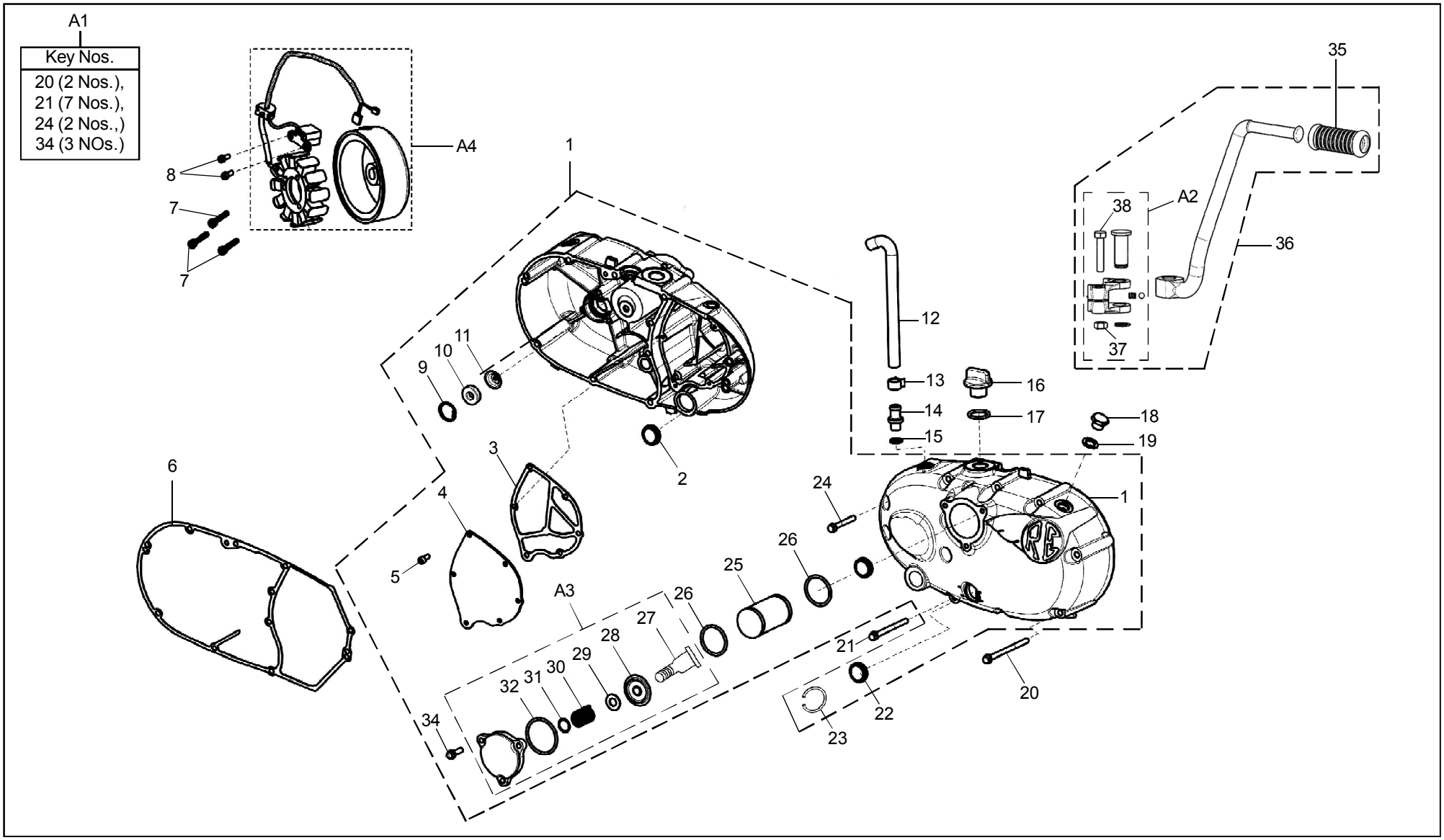

01-65 COVER RH

Key No.	Part Number	Description	Qty	BU EFI	Classic					Conti GT	Remarks
					500	Chr	DS	BG	SB		
A1	888112	Bolt Repair kit RH Crankcase Cover- Classic	1	●	●	●	●	●	●	●	
A2	888101	Kick Boss Repair Kit- Classic	1	●	●	●	●	●	●	●	
A3	570878	Cap Oil Filter Sub Assembly	1	●	●	●	●	●	●	●	
A4	571282/B	Fly wheel Magneto Assy	1	●	●	●	●	●	●		
A4	1010159/A	Fly wheel Magneto Assy	1							●	
1	861036	Cover RH Assy.	1	●	●	●	●	●	●	●	
2	570241	Oil Seal Kick Starter G20X27X5 Double Lip	2	●	●	●	●	●	●	●	
3	570426/h	Gasket, Cover Plate	1	●	●	●	●	●	●	●	
4	570424/e	Cover Plate, Breather Chamber	1	●	●	●	●	●	●	●	
5	570425/b	Hex Socket Hd Cap Screw M5 X 0.8 X 12	6	●	●	●	●	●	●	●	
6	570416/n	Gasket, Cover RH	1	●	●	●	●	●	●	●	
7	570718/b	Hex Socket Head Cap Screw M5X30,SS	3	●	●	●	●	●	●	●	
8	570431/b	Hex Flange Bolt M5 X 0.8 X 16	2	●	●	●	●	●	●	●	
9	550028	Circlip 24 N	1	●	●	●	●	●	●	●	
10	500622/b	Oil Seal, Crank Feed 24 X 10 X 7	1	●	●	●	●	●	●	●	
11	570183/d	Jet, Crankshaft - RH	1	●	●	●	●	●	●	●	
12	570286/d	Breather Pipe	1	●	●	●	●	●	●		
12	1010144/A	Breather Pipe	1							●	
13	573964/a	Clip Breather Pipe, White	1	●	●	●	●	●	●	●	
14	573968/b	Bolt, Breather	1	●	●	●	●	●	●	●	
15	570155	Sealing Washer 12 X 15.5	1	●	●	●	●	●	●	●	
16	570467/c	Oil Filler Cap, Cover RH- Aluminium	1	●	●	●	●	●	●	●	
17	146459/a	‘O’ Ring	1	●	●	●	●	●	●	●	
18	570176/d	Inspection Screw	1	●	●	●	●	●	●	●	

01-65 COVER RH

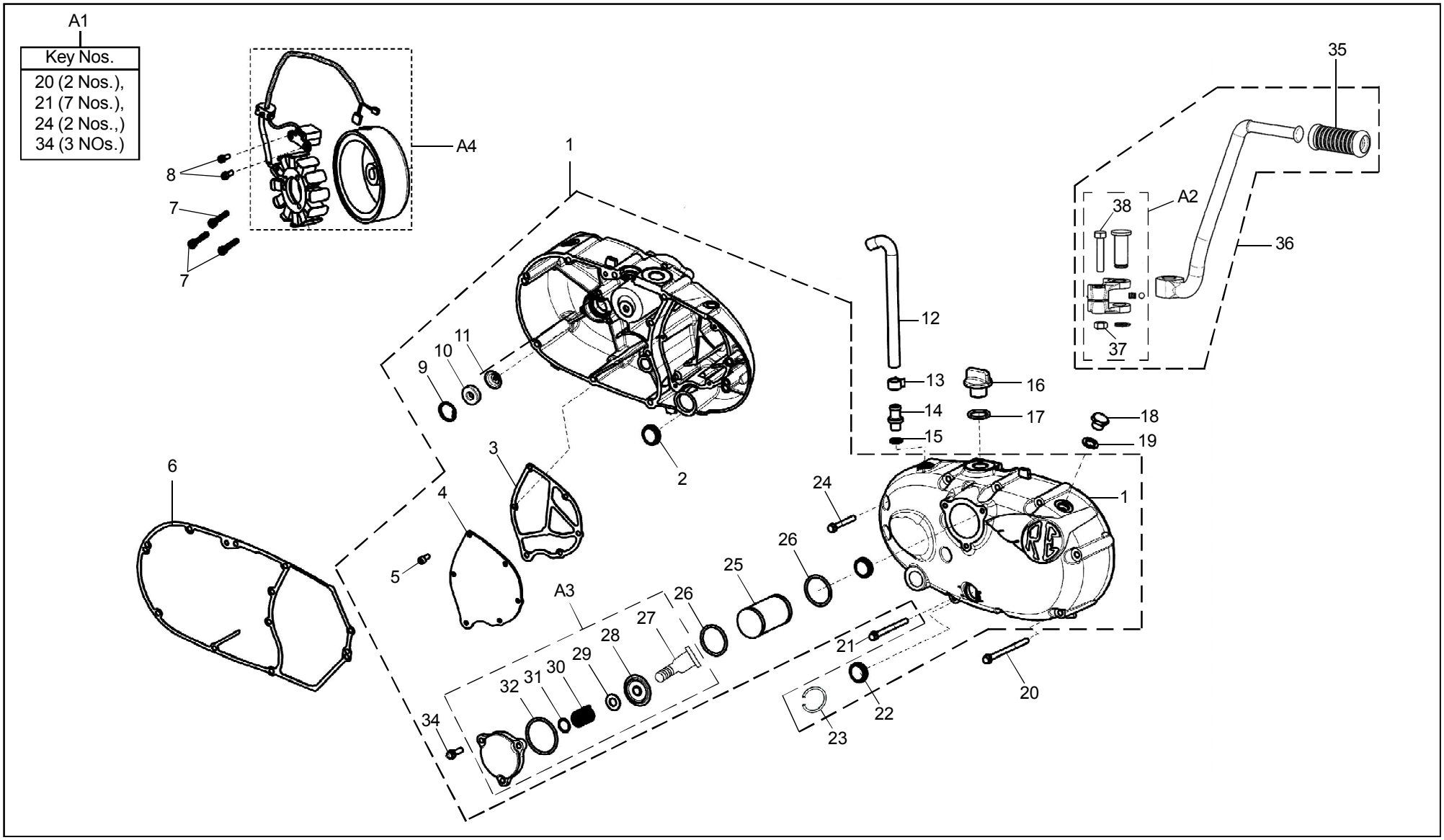

01-65 COVER RH

Key No.	Part Number	Description	Qty	BU EFI	Classic					Conti GT	Remarks
					500	Chr	DS	BG	SB		
19	144846/a	Washer, Inspection Screw	1	●	●	●	●	●	●	●	
20	572016/a	Hex Flange Bolt M6X1 X 85	2	●	●	●	●	●	●	●	
21	572017/a	Hex Flange Bolt M6X1X 70	7	●	●	●	●	●	●	●	
22	571254/a	Oil Level Window (HTA)	1	●	●	●	●	●	●	●	
23	570604/a	Circlip-Oil Level Window	1	●	●	●	●	●	●	●	
24	572019/a	Hex Flange Bolt M6X1X45	1	●	●	●	●	●	●	●	
25	~~500613/a~~	Element-Oil Filter	1	●	●	●	●	●	●	●	
26	500619/a	O' Ring	2	●	●	●	●	●	●	●	
27	571201/a	Screw-Spring Cap	1	●	●	●	●	●	●	●	
28	500616/a	Spring Cap	1	●	●	●	●	●	●	●	
29	500621/a	O'-Ring Cap Oil Filter	2	●	●	●	●	●	●	●	
30	500637/b	Spring	1	●	●	●	●	●	●	●	
31	500617/a	Washer	1	●	●	●	●	●	●	●	
32	572014/a	O' Ring, Filter Cap	1	●	●	●	●	●	●	●	
33	861015	Cap, Oil Filter	1	●	●	●	●	●	●	●	
34	572011/a	Hex Flange Bolt M6 X 1 X 20	3	●	●	●	●	●	●	●	
35	146642/a	Sleeve, Kick Start Lever	1	●	●	●	●	●	●	●	
36	570807/f	Assy, Kick Start Crank	1	●	●	●	●	●	●		
	573156/a	Assy, Kick Start Crank	1							●	
37	586084/a	Flanged U Nut M8 X 1.25	1	●	●	●	●	●	●	●	
38	111914	Hex. Bolt M8X40	1	●	●	●	●	●	●	●	

02- 00 PISTON, RINGS & CYLINDER BARREL

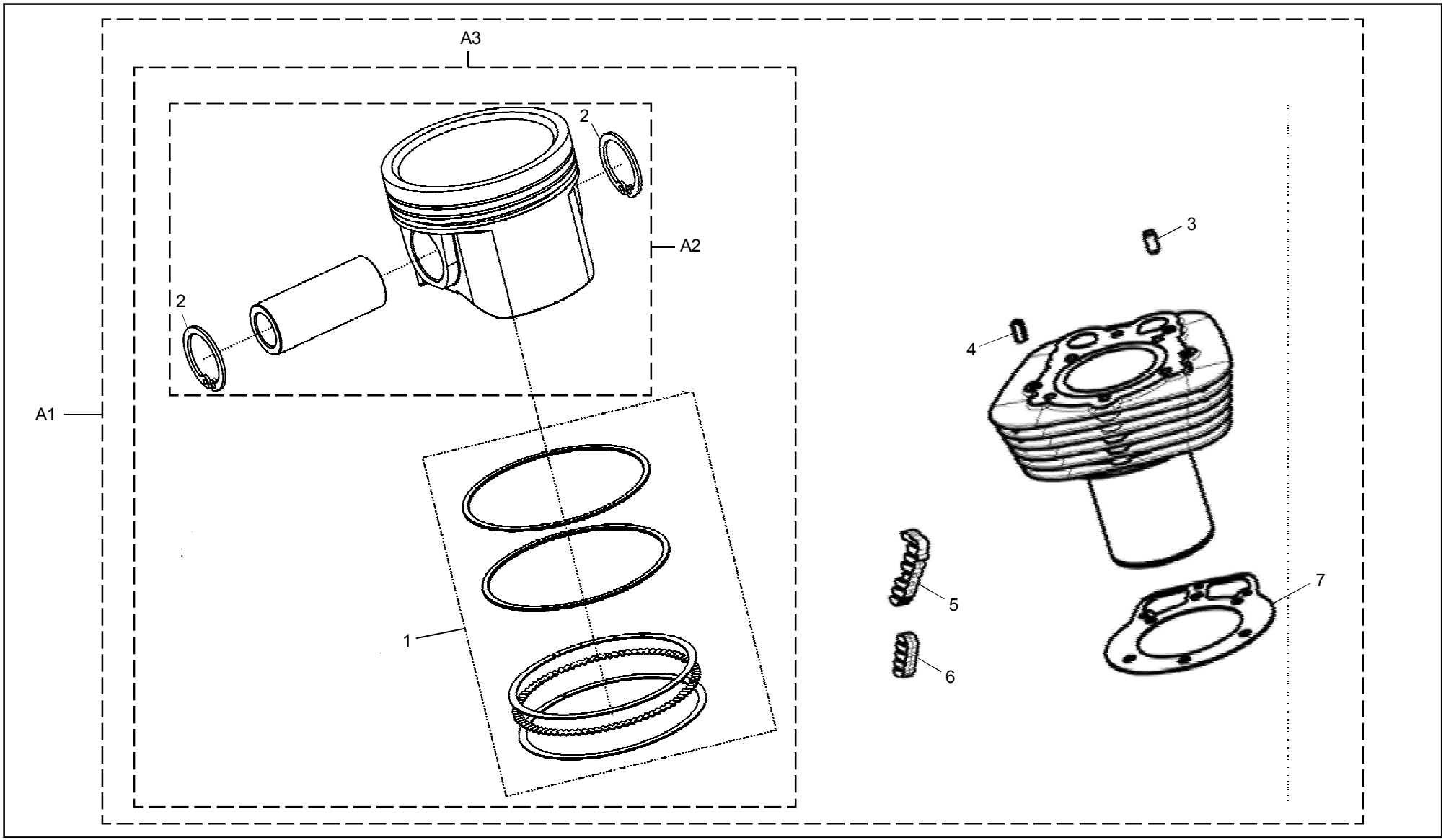

02- 00 PISTON, RINGS & CYLINDER BARREL

Key No.	Part Number	Description	Qty	BU EFI	Classic					Conti GT	Remarks
					500	Chr	DS	BG	SB		
A1	600005	Cylinder barrel & piston W/Rings Assy - 500CC	1	●	●	●	●	●	●		
	888291	Cylinder barrel & piston W/Rings Assy - 535CC	1							●	
A2	571108/b	Piston Assy. With Pin & Circlip - 500CC	1	●	●	●	●	●	●		
A3	573016/a	Piston Assy. With Pin, Circlip & Rings - 535CC	1							●	
1	571109	Ring Set, Std, 500 cc, Dia 84 mm	1	●	●	●	●	●	●		
	573019	Ring Set, Std, 535CC	1							●	
2	571119/a	Circlip	2	●	●	●	●	●	●	●	
3	500123/a	Dowel Pin, Inlet	1	●	●	●	●	●	●	●	
4	500116/a	Dowel Pin, Exhaust (Flat Faced)	1	●	●	●	●	●	●	●	
5	570482/b	Damper Pad – Cylinder Barrel Tapper	6	●	●	●	●	●	●	●	
6	570480/b	Damper Pad – Cylinder Barrel	3	●	●	●	●	●	●	●	
7	571043/c	Gasket - Cyl Barrel To Cr case-500 CC	1	●	●	●	●	●	●	●	

03-00 CYLINDER HEAD

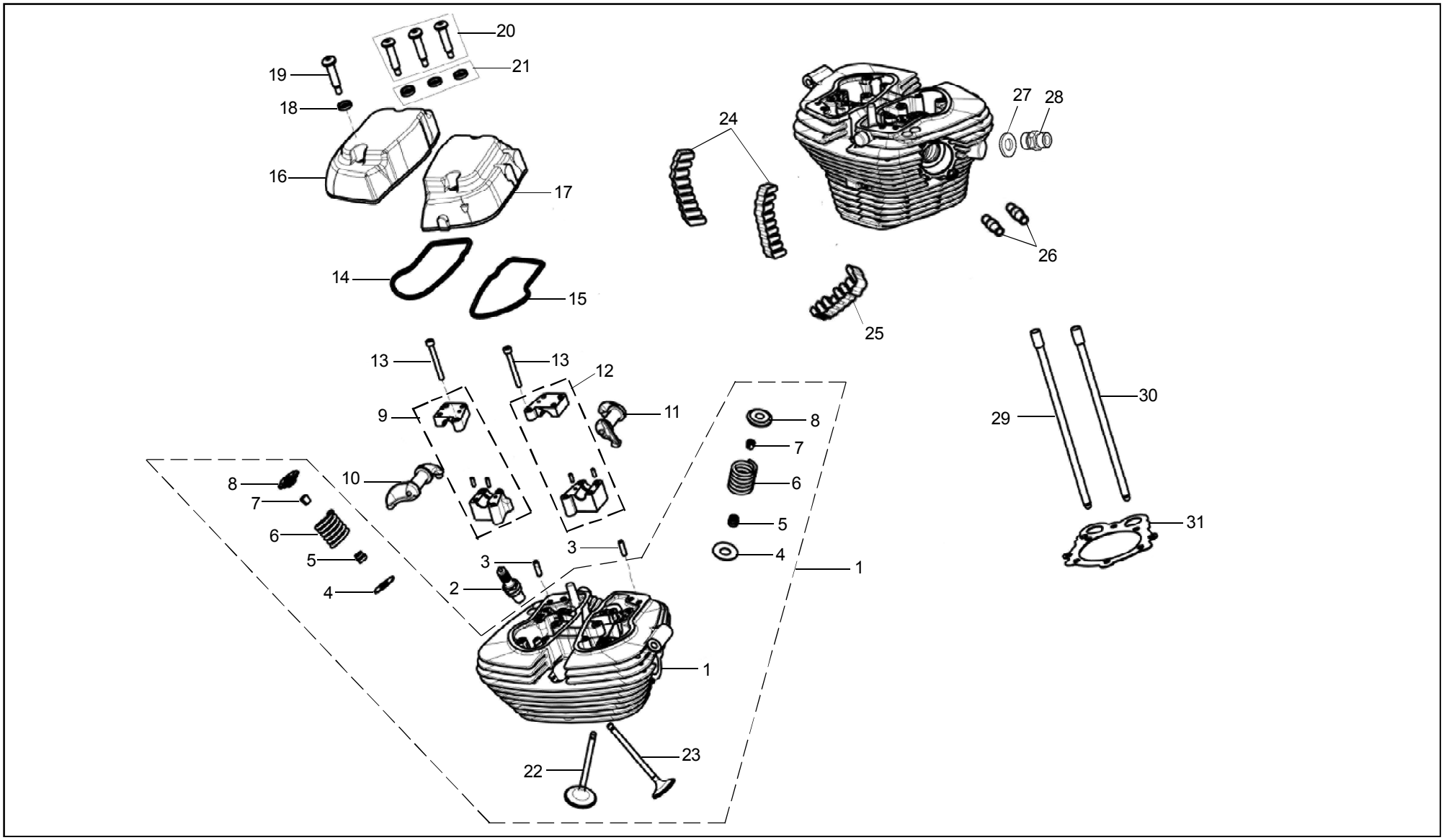

03-00 CYLINDER HEAD

Key No.	Part Number	Description	Qty	BU EFI	Classic					Conti GT	Remarks
					500	Chr	DS	BG	SB		
1	576592	Cylinder Head Assembly (500cc)	1	●	●	●	●	●	●		
	891022	Cylinder Head Assembly (535cc)	1							●	
2	572327/b	Spark Plug WQR8DC	1	●	●	●	●	●	●	●	
3	570298/a	Dowel - 6MM	2	●	●	●	●	●	●	●	
4	500347/a	Seat, Spring	2	●	●	●	●	●	●	●	
5	500322/a	Seal- Valve Stem	2	●	●	●	●	●	●	●	
6	500309/b	Valve Spring	2	●	●	●	●	●	●	●	
7	500307/b	Valve Collet (Split Collar)	4	●	●	●	●	●	●	●	
8	500352/a	Retainer, Spring	2	●	●	●	●	●	●	●	
9	570533/n	Rocker Bearing Set Assy - Exhaust	1	●	●	●	●	●	●	●	
10	570535/g	Rocker Arm _Exhaust	1	●	●	●	●	●	●	●	
11	570536/g	Rocker Arm _Inlet	1	●	●	●	●	●	●	●	
12	570532/n	Rocker Bearing Set Assy - Inlet	1	●	●	●	●	●	●	●	
13	570131/a	Hex. Socket Screw,M6 X 55	4	●	●	●	●	●	●	●	
14	572022/d	Gasket, Rocker Cover _ Exhaust, Rubber	1	●	●	●	●	●	●	●	
15	572021/d	Gasket, Rocker Cover _ Inlet, Rubber	1	●	●	●	●	●	●	●	
16	861017	Rocker Cover_ Exhaust	1	●	●	●	●	●	●	●	
17	861016	Rocker Cover, Inlet	1	●	●	●	●	●	●	●	
18	573906/a	Washer Seal (Rocker Cover)	1	●	●	●	●	●	●	●	
19	570129/h	Bolt (Rocker Cover)	1	●	●	●	●	●	●	●	
20	571117/c	Bolt(Rocker Cover)	3	●	●	●	●	●	●	●	
21	573907/a	Washer - Seal (Rocker Cover)	3	●	●	●	●	●	●	●	
22	571035/c	Valve - Exhaust	1	●	●	●	●	●	●	●	
23	571034/c	Valve, Inlet	1	●	●	●	●	●	●		

03-00 CYLINDER HEAD

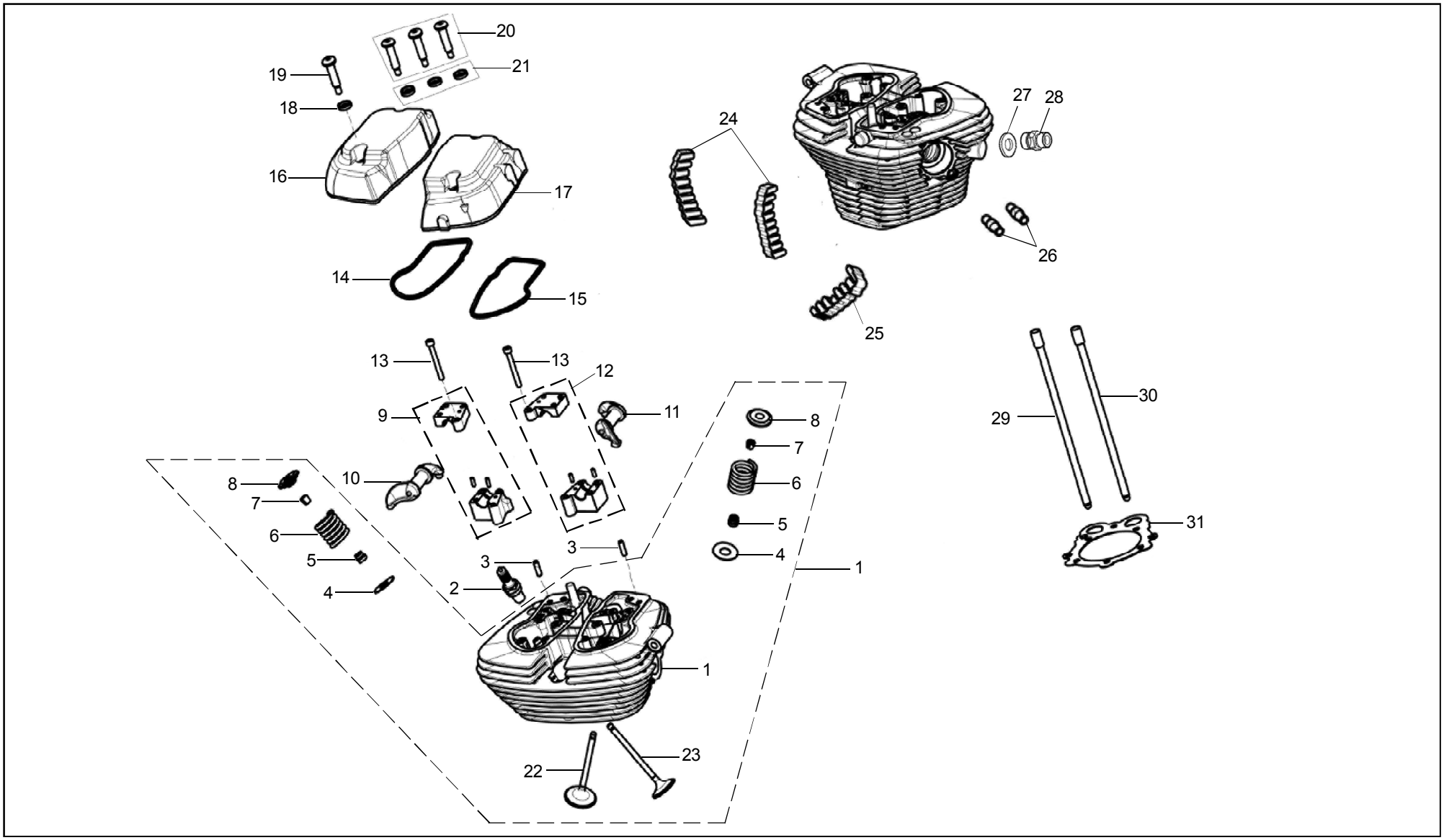

03-00 CYLINDER HEAD

Key No.	Part Number	Description	Qty	BU EFI	Classic					Conti GT	Remarks
					500	Chr	DS	BG	SB		
23	573045/a	Valve, Inlet	1							●	
24	570478/b	Damper Pad – Cylinder Head	2	●	●	●	●	●	●	●	
25	570479/b	Damper Pad RH - Cylinder Head	4	●	●	●	●	●	●	●	
26	573931/a	Stud, Exhaust, Special L-45 X M8 X 1.25	2	●	●	●	●	●	●	●	
27	144844	Sealing Washer 16X20 - 500 cc	1	●	●	●	●	●	●	●	
28	582555/b	Adaptor - Cyl Head - Yellow Passivation	1	●	●	●	●	●	●	●	
	572304/a	Adaptor - Cyl Head - White Passivation	1							●	
29	570537/d	Push Rod Assy, Ex	1	●	●	●	●	●	●	●	
30	570538/d	Push Rod Assy, Inlet	1	●	●	●	●	●	●	●	
31	571039/b	Gasket–Cylinder Head (MS)	1	●	●	●	●	●	●		
	573015/a	Gasket–Cylinder Head (MS)	1							●	

04-00 FUEL INJECTION AND SENSORS

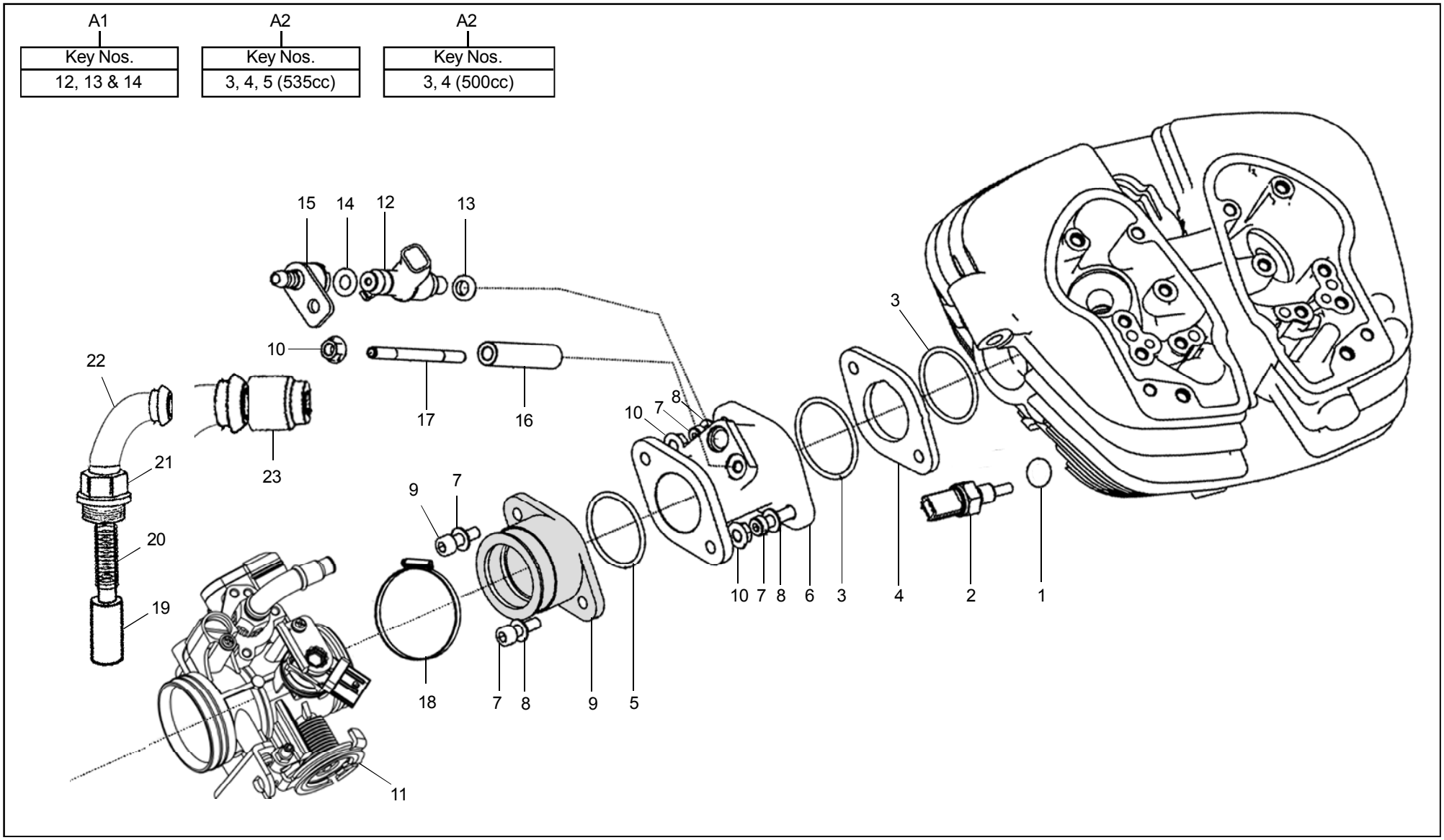

05-00 FUEL INJECTION AND SENSORS

Key No.	Part Number	Description	Qty	BU EFI	Classic					Conti GT	Remarks
					500	Chr	DS	BG	SB		
A1	571086	Injector Assy Kit	1	●	●	●	●	●	●	●	
A2	888183	Insulator Kit	1	●	●	●	●	●	●		
	888262	Insulator Kit	1							●	
1	572607/a	'O' Ring - Temperature Sensor	1	●	●	●	●	●	●	●	
2	576067/A	Engine Temperature sensor	1	●	●	●	●	●	●	●	
3	521200/a	'O' Ring - Insulator and Adaptor	2	●	●	●	●	●	●		**For 500 cc engine**
	521200/a	'O' Ring - Insulator and Adaptor	3							●	**For 535cc engine**
4	571079/d	Insulator	1	●	●	●	●	●	●		
	573044/b	Insulator	1							●	
5	144981/b	'O' Ring - Inlet Manifold	1	●	●	●	●	●	●		**Only for 500cc**
6	571080/g	Manifold, Inlet	1	●	●	●	●	●	●		
	573042/b	Manifold, Inlet	1							●	
7	571206/a	Hex. Socket Screw,M6 X 25	4	●	●	●	●	●	●	●	
8	144636/a	Copper Washer M6 X 10	4	●	●	●	●	●	●	●	
9	571091/a	Adaptor - Without Pulse Air Valve Connection	1	●	●	●	●	●	●		
	573146/a	Adaptor - With Pulse Air Valve Connection	1							●	
10	593090/c	Hex NUT M6 X 1 (U Nut)	3	●	●	●	●	●	●	●	
11	571208/b	Throttle Body	1	●	●	●	●	●	●		
	573162/a	Throttle Body	1							●	
12	571053/a	Injector	1	●	●	●	●	●	●	●	
13	571090/a	Seal, Ring	1	●	●	●	●	●	●	●	
14	571087/a	O-Ring, Injector	1	●	●	●	●	●	●	●	
15	573047/a	Cap - Injector Assembly L Bend Type	1	●	●	●	●	●	●	●	
16	573935/a	Spacer	1	●	●	●	●	●	●	●	

05-00 FUEL INJECTION AND SENSORS

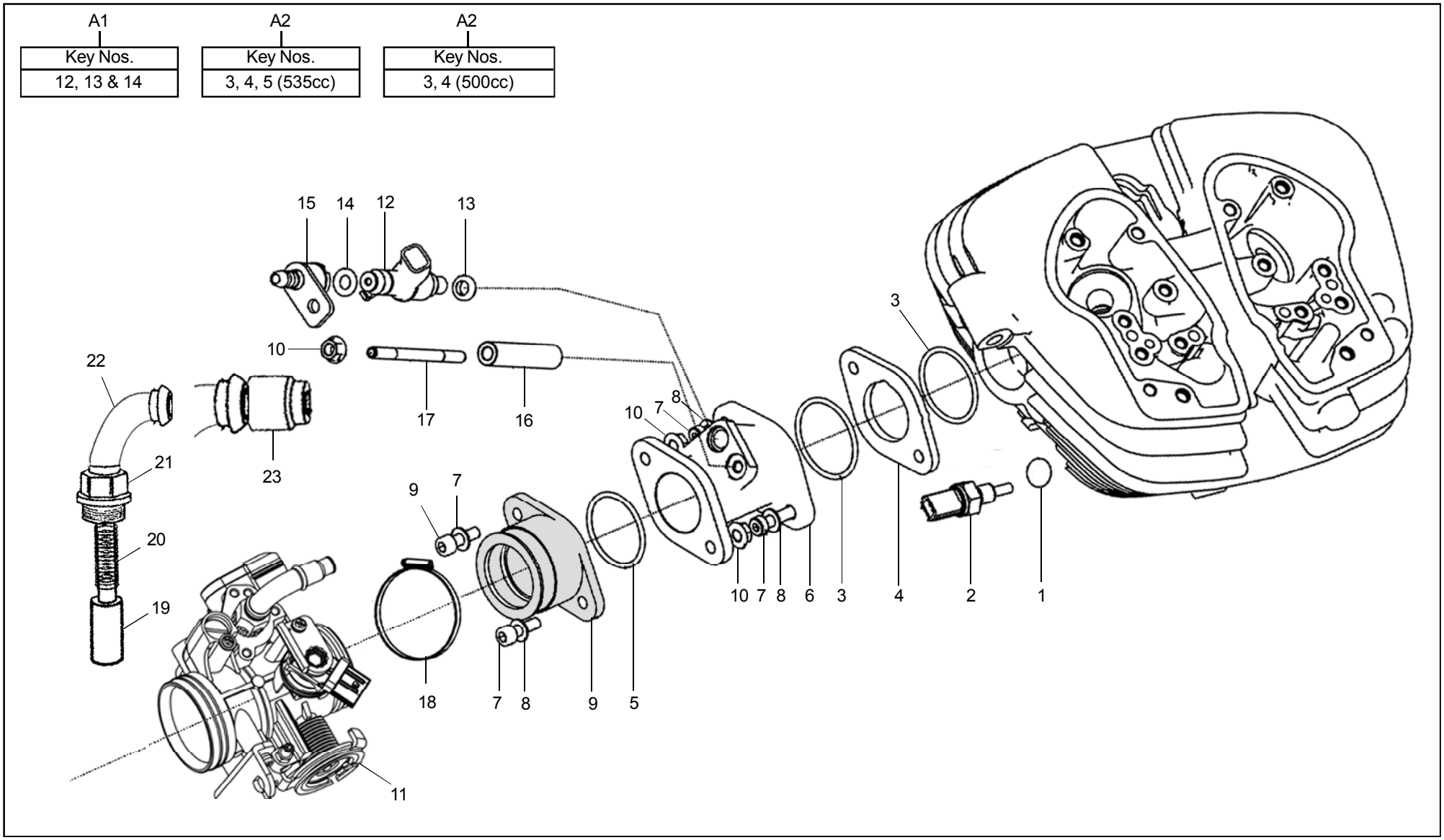

05-00 FUEL INJECTION AND SENSORS

Key No.	Part Number	Description	Qty	BU EFI	Classic					Conti GT	Remarks
					500	Chr	DS	BG	SB		
17	571249/a	Stud - Injector	1	●	●	●	●	●	●	●	
18	592656/b	Hose Clip	1	●	●	●	●	●	●		
	500712/a	Hose Clip	1							●	
19	571226/a	Valve Bi- Starter	1	●	●	●	●	●	●	●	
20	571227/a	Spring Valve Bi- Starter	1	●	●	●	●	●	●	●	
21	571228/a	Holder - Cable Valve	1	●	●	●	●	●	●	●	
22	571229/a	Guide - Cable Valve	1	●	●	●	●	●	●	●	
23	571230/a	Cap - Valve Bi starter	1	●	●	●	●	●	●	●	

05-00 PART NUMBER INDEX

Part Number	Page No.	Key No.
110050	21	7
111914	41	38
144844	47	27
550024	25	5
550025	23	4
550028	39	9
550108	35	32
550141	25	18
560013	35	34
570011	21	16
570016	17	27
570024	17	30
570025	17	31
570028	31	32
570030	13	3
570030	15	1
570032	15	19
570037	29	9
570094	17	26

Part Number	Page No.	Key No.
570130	15	16
570155	39	15
570157	25	A2
570207	29	3
570209	27	7
570213	33	17
570232	29	6
570234	37	9
570241	33	13
570241	39	2
570293	35	26
570407	13	14
570440	19	5
570441	19	16
570442	19	6
570481	35	28
570713	35	38
570878	9	9
570878	39	A3

Part Number	Page No.	Key No.
571086	9	10
571086	49	A1
571109	43	1
573019	43	1
576592	45	1
600005	9	1
600005	43	A1
825592	11	1
858070	11	1
859101	11	1
861003	17	28
861015	41	33
861016	45	17
861017	45	16
861029	13	A1
861030	9	2
861035	37	10
861036	39	1
861070	9	2

Part Number	Page No.	Key No.
866254	11	1
873116	11	1
884001	33	14
888101	9	7
888101	39	A2
888102	9	5
888102	19	A2
888112	9	8
888112	39	A1
888115	9	3
888115	13	A2
888180	9	4
888180	33	A3
888181	9	4
888181	33	
888182	9	6
888182	27	A2
888183	9	11
888183	49	A2

05-00 PART NUMBER INDEX

Part Number	Page No.	Key No.
888232	11	2
888262	9	11
888262	49	A2
888290	11	2
888291	9	1
891022	43	A1
891022	45	1
110037/3	21	6
110037/3	29	1
120005/b	29	10
140293/1	15	11
140331/a	27	2
140332/b	27	3
140333/b	27	4
141246/c	15	12
142257/b	31	30
144600/a	35	37
144636/a	17	33
144636/a	35	29

Part Number	Page No.	Key No.
144636/a	49	8
144846/a	31	25
144846/a	41	19
144981/b	49	5
146031/a	35	31
146450/b	27	8
146450/b	33	15
146459/a	39	17
146640/a	13	7
146642/a	41	35
146714/a	31	31
500104/d	21	4
500104/d	29	11
500116/a	43	4
500123/a	43	3
500307/b	45	7
500309/b	45	6
500322/a	45	5
500347/a	45	4

Part Number	Page No.	Key No.
500352/a	45	8
500613/a	41	25
500616/a	41	28
500617/a	41	31
500619/a	41	26
500621/a	41	29
500622/b	39	10
500635/a	15	20
500637/b	41	30
500712/A	51	18
502018/b	13	9
502019/a	13	10
502070/a	23	2
521200/a	49	3
521200/a	49	3
550007/e	25	10
550008/d	25	2
550011/e	25	11
550023/e	25	3

Part Number	Page No.	Key No.
550030/c	25	12
550030/c	27	5
550032/a	21	12
550032/a	31	33
550061/c	13	15
550072/b	37	7
550075/a	13	13
550075/a	25	20
550078/a	25	17
550081/f	25	15
550090/f	25	14
550091/f	25	16
550103/a	13	6
550119/b	25	21
550216/e	25	8
550256/a	37	12
570005/c	21	9
570006/e	21	8
570007/f	15	21

05-00 PART NUMBER INDEX

Part Number	Page No.	Key No.
570008/k	21	5
570012/c	21	14
570029/d	15	13
570040/d	33	10
570041/d	33	10
570044/j	33	5
570047/e	15	2
570052/a	35	24
570054/g	31	29
570057/b	31	28
570063/f	15	23
570072/d	15	17
570074/i	17	25
570078/d	31	27
570086/d	15	8
570087/d	21	15
570088/d	15	6
570089/d	15	7
570090/d	15	4

Part Number	Page No.	Key No.
570091/d	15	15
570097/b	29	15
570097/b	35	36
570099/c	33	9
570100/b	33	7
570129/h	45	19
570131/a	45	13
570132/a	33	4
570132/a	35	23
570158/b	25	A1
570176/d	39	18
570183/d	39	11
570184/b	37	2
570198/c	33	2
570201/f	21	11
570201/f	31	34
570202/e	25	13
570204/n	25	7
570205/p	25	1

Part Number	Page No.	Key No.
570206/n	29	4
570208/b	29	5
570214/g	33	18
570218/d	35	33
570219/g	37	1
570227/f	37	8
570229/d	37	13
570230/f	37	14
570231/h	37	4
570233/b	37	5
570235/f	37	3
570239/c	31	35
570240/c	31	36
570246/e	35	21
570247/d	35	20
570248/e	27	6
570249/h	19	1
570276/d	29	24
570280/b	33	8

Part Number	Page No.	Key No.
570286/d	39	12
570295/a	15	3
570298/a	17	29
570298/a	33	6
570298/a	45	3
570300/c	33	12
570300/c	35	39
570303/a	35	35
570304/b	37	11
570309/b	33	A1
570416/n	39	6
570421/a	33	3
570424/e	39	4
570425/b	39	5
570426/h	39	3
570431/b	21	13
570431/b	31	26
570431/b	39	8
570433/b	19	15

05-00 PART NUMBER INDEX

Part Number	Page No.	Key No.
570434/d	19	10
570436/c	19	11
570437/c	19	12
570438/b	19	9
570439/b	19	8
570446/k	19	4
570447/b	19	7
570451/b	19	14
570452/e	13	12
570465/c	19	2
570467/c	39	16
570468/b	35	30
570469/a	29	2
570478/b	47	24
570479/b	47	25
570480/b	43	6
570482/b	43	5
570532/n	45	12
570533/n	45	9

Part Number	Page No.	Key No.
570535/g	45	10
570536/g	45	11
570537/d	47	29
570538/d	47	30
570551/e	17	24
570570/c	15	18
570596/b	25	9
570604/a	41	23
570643/a	37	6
570658/b	29	21
570662/c	29	16
570663/c	29	20
570664/a	29	22
570665/b	29	19
570666/a	29	18
570702/a	29	23
570706/c	25	A3
570715/a	21	3
570715/a	29	14

Part Number	Page No.	Key No.
570716/c	21	2
570716/c	29	13
570718/b	39	7
570805/b	27	A1
570806/a	27	1
570807/f	41	36
570821/a	25	6
570823/a	25	4
570892/b	27	9
570892/b	33	16
570951/a	15	9
571004/f	35	19
571034/c	45	23
571035/c	45	22
571039/b	47	31
571043/c	43	7
571047/d	33	A2
571053/a	49	12
571079/d	49	4

Part Number	Page No.	Key No.
571080/g	49	6
571087/a	49	14
571090/a	49	13
571100/a	19	13
571108/b	43	A2
571113/a	19	A1
571115/c	35	27
571116/b	29	8
571117/c	45	20
571119/a	43	2
571155/a	35	22
571156/d	13	11
571164/b	33	11
571166/b	35	25
571172/d	23	1
571201/a	41	27
571205/a	21	10
571206/A	49	7
571208/b	49	11

05-00 PART NUMBER INDEX

Part Number	Page No.	Key No.
571216/b	15	22
571221/a	15	14
571226/a	51	19
571227/a	51	20
571228/a	51	21
571229/a	51	22
571230/a	51	23
571249/a	51	17
571254/a	41	22
571282/B	39	A4
572011/a	41	34
572012/a	35	40
572014/a	41	32
572015/a	13	2
572015/a	13	3
572016/a	41	20
572017/a	41	21
572019/a	41	24
572021/d	45	15

Part Number	Page No.	Key No.
572022/d	45	14
572043/b	33	1
572044/a	25	19
572304/a	47	28
572327/b	45	2
572338/b	29	17
572371/A	13	8
572607/a	49	1
573015/a	47	31
573016/a	43	A3
573028/a	29	7
573033/a	23	1
573042/b	49	6
573043/b	49	9
573044/b	49	4
573045/a	47	23
573047/a	49	15
573085/a	33	1
573146/A	49	9

Part Number	Page No.	Key No.
573156/a	41	36
573162/a	49	11
573906/a	45	18
573907/a	45	21
573925/a	13	1
573931/a	47	26
573935/a	49	16
573964/a	39	13
573968/b	39	14
576067/A	49	2
582510/a	17	32
582555/b	47	28
586005/a	21	1
586005/a	29	12
586008/a	23	3
586021/a	13	5
586032/a	13	4
586084/a	15	10
586084/a	41	37

Part Number	Page No.	Key No.
592593/a	15	A1
592656/B	51	18
593038/d	19	3
593090/c	15	5
593090/c	49	10
1010144/A	39	12
1010159/A	39	A4

ROYAL ENFIELD GENUINE PARTS

Euro 4 Motorcycles

FOREWORD

We are pleased to release this Vehicle Spare Parts Catalogue for the Royal Enfield Models for the Euro IV Regulation markets.

This Catalogue has been designed for identification of correct part number to help in ordering Spare Parts.

The illustration of the various parts are not to scale and is intended to serve only as a means of identification of the component for its shape and relative location in its respective assembly.

Due to continuous improvements in the motorcycle, the part nos and / or illustrations are subject to change without prior notice. However the changes will be intimated through technical Service Bulletin subsequently and periodically which must be updated by you in the catalogue at your end.

The part numbers and description were correct at the time of printing. While extreme care is taken in publishing this catalogue. We shall not be held responsible for any errors/omissions or wrong interpretations and consequent loss of any nature due to any of the above.

For enquiry, suggestions or feedback, please feel free to write to us

SERVICE HEADQUARTERS :

ROYAL ENFIELD

(A Unit of Eicher Motors Limited)

Thiruvottiyur High Road, Thiruvottiyur, Chennai - 600 019. India.

Tel : +91-44-4223 0400, Fax : +91-44-4201 1719. Website : www.royalenfield.com

E-mail : customerservice@royalenfield.com

“© Copyright 2017 Royal Enfield (A Unit of Eicher Motors Ltd). All Rights Reserved. No part of this Spare Parts Catalogue shall be copied, distributed or otherwise dealt without the express permission in written from the Royal Enfield who remains the sole owner of this catalogue.”

Part No. 888563 / Version 1.0 / Feb. 2017

For easy reference and quick identification, the parts are grouped into relevant categories as shown.

PICTORIAL ILLUSTRATION

Helps in identifying the shape of the part in its relative Assy..

02 - 15 AIRFILTER ASSEMBLY - CONTINENTAL GT

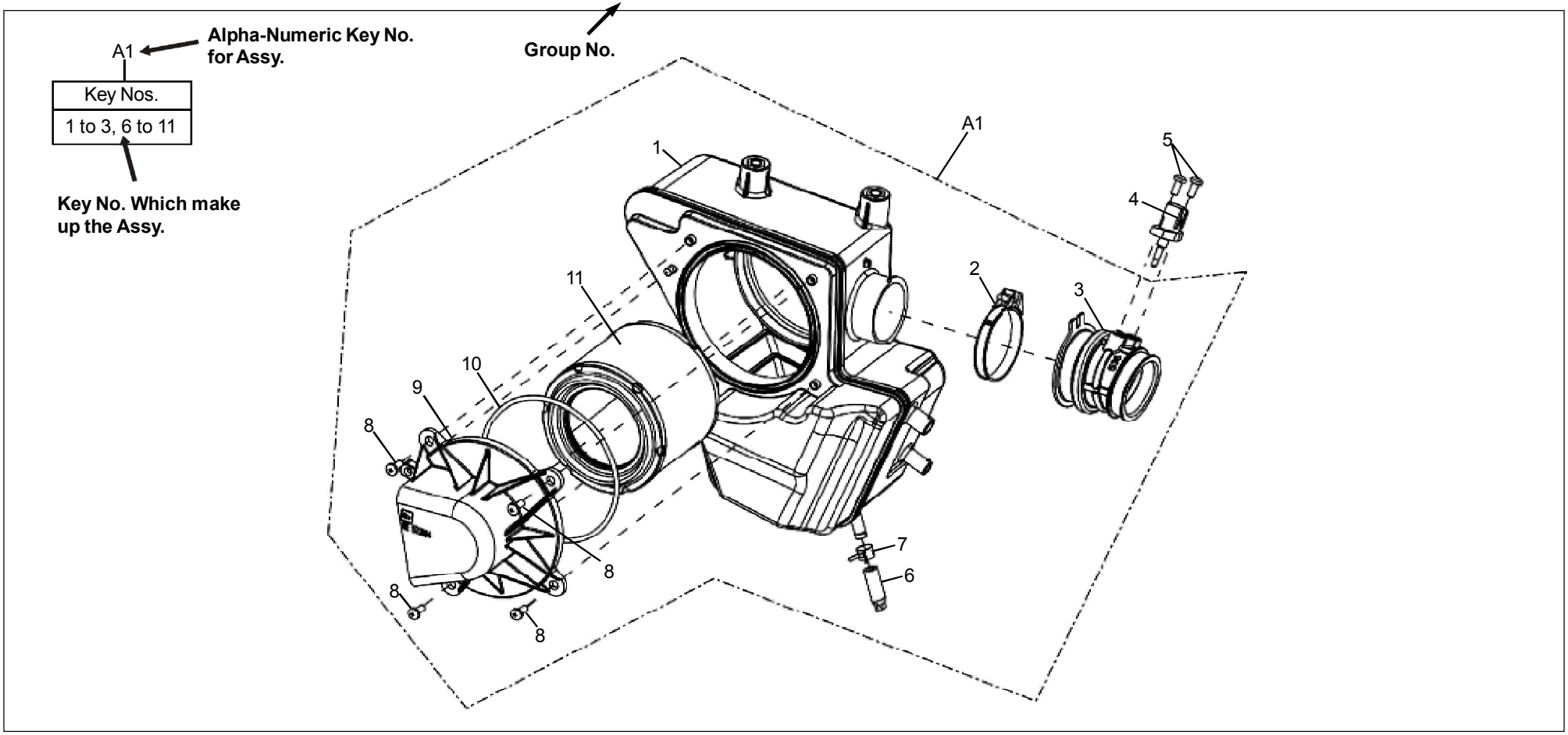

Part Number List

Key No.	Part Number	Description	Qty	Bullet EFI	Classic				Conti GT	Remarks
					500	DS	BG	Chro me		
1	2	3	4	5	6	7	8	9	10	11

1. KEY NUMBER (KEY NO.)

The numeric key number is provided to serve as the identification of the part with its part number.

Serviceable assemblies or kits in a particular group are identified by alpha-numeric key numbers. e.g. A1, A2 etc. In such cases, key numbers of Individual items or group number which make up such assembly / kit are given in illustration.

2. PART NUMBER

The Part number of the individual item, kit or the assembly is given in this column for unique identification.

Please refer column 5 to 10 for Model wise Applicability.

3. DESCRIPTION

The description of the part assigned to the individual item kit / assembly is mentioned in this column.

4. QUANTITY

The number of individual items, kits or assemblies required for one vehicle is mentioned here. Though quantity is indicated for oversize (O/S) or undersize (U/S) of some items, it is to be understood that for a vehicle the sizes only is applicable, depending upon the repair/matching requirements.

5-10. MODEL APPLICABILITY

The model for which the part is applicable is mentioned here by a “●” mark.

Bullet EFI	Classic				Continental GT (Conti GT)
	500	(Desert Storm) DS	(Battle Green) BG	Chrome	

11. REMARKS

Any specific applicability or additional information is mentioned here.

GROUP INDEX

Group No.	Description	Page No.
01 - 10	Frame LH - Bullet EFI Models	15
01 - 15	Frame RH - Bullet EFI Models	19
01 - 20	Frame LH - Classic Models	21
01 - 25	Frame RH - Classic Models	27
01 - 30	Frame LH - Continental GT	31
01 - 35	Frame RH - Continental GT	33
02 - 10	Filter Box Assembly - Bullet EFI & Classic Models	37
02 - 15	Airfilter Assembly - Continental GT	41
03 - 10	Solenoid & Reed Valve Assembly	43
04 - 10	Exhaust Pipe & Silencer	45
05 - 10	Fuel Tank - Bullet EFI & Classic Models	49
05 - 15	Fuel Tank - Continental GT	53
06 - 10	Evaporative Emissions - Bullet EFI & Classic Models	55
06 - 15	Evaporative Emissions - Continental GT	57
07 - 10	Seat Assy - Bullet EFI Models	59
07 - 15	Seat Assy - Classic Models	61
07 - 20	Seat Assy - Continental GT	65
08 - 10	Handle Bar & Controls - Bullet EFI & Classic Models	67
08 - 15	Handle Bar & Controls - Continental GT	69
09 - 10	Control Cables	73
10 - 10	Steering Stem & Head Lamp Casing - Bullet EFI & Classic Models	75
10 - 15	Steering Stem Assembly - Continental GT	79
11 - 10	Front Fork - Bullet EFI & Classic Models	81
11 - 15	Front Fork - Continental GT	85
12 - 10	Front Mudguard - Bullet EFI & Classic Models	89
12 - 15	Front Mudguard - Continental GT	93
13 - 10	Front Wheel - Bullet EFI & Classic Models	95
13 - 15	Front Wheel - Continental GT	97
14 - 10	Rear Wheel - Bullet EFI & Classic Models	99

Group No.	Description	Page No.
14 - 15	Rear Wheel - Continental GT	103
15 - 10	Antilock Brake System - Bullet EFI & Classic Models	107
15 - 15	ABS Mounting to Frame - Bullet EFI & Classic Models	109
15 - 20	Anti Lock Brakes System - Continental GT	111
15 - 25	ABS Mounting to Frame - Continental GT	113
16 - 10	Swing Arm Assy - Bullet EFI & Classic Models	115
16 - 15	Swing Arm Assy - Continental GT	117
16 - 20	Rear Shockabsorbers	121
17 - 10	Rear Mudguard Assembly - Bullet EFI Models	123
17 - 15	Rear Mudguard Assembly - Classic Models	127
17 - 20	Rear Mudguard Assembly - Continental GT	131
18 - 10	Center & Side Stands	133
19 - 10	Foot Rests & Brake Pedal - Bullet EFI & Classic Models	137
19 - 15	Foot Rests, Gear Shift & Brake Pedal - Continental GT	141
20 - 10	ABS Bracket - Bullet EFI & Classic Models	145
20 - 15	Utility Box - Continental GT	147
21 - 10	Side Panels - Continental GT	149
22 - 10	Electrical Box - Bullet EFI & Classic Models	151
23 - 10	Battery, Battery Carrier & Cover	153
24 - 10	Wiring Harness & Fuses	155
25 - 10	Common key, Switches, Locks & Horn	157
26 - 10	Meters & Instrument Console	159
27 - 10	Electronic Control Unit & Sensors	161
28 - 10	RR Unit, Ignition Coil, Relays, Flasher Unit & Suppressor Cap	165
29 - 10	Head Lamp & Pilot Lamp	169
30 - 10	Trafficator Lights	171
31 - 10	Tail Lamp	173
32 - 10	Tool Kit	175
33 - 10	Part Number Index	176

GROUP INDEX - PICTORIAL

01 - 10 Frame LH - Bullet EFI Models Page 14

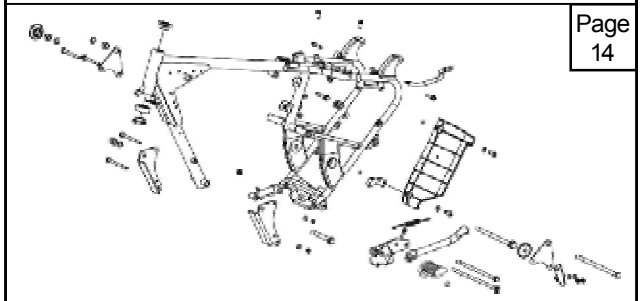

01 - 15 Frame RH - Bullet EFI Models Page 18

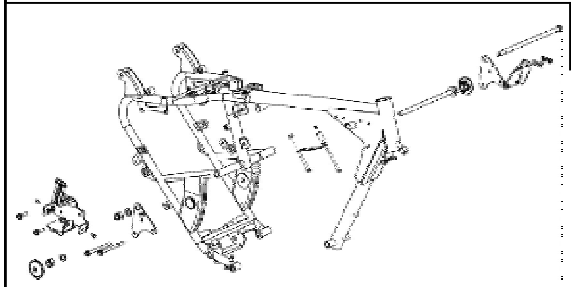

01 - 20 Frame LH - Classic Models Page 20

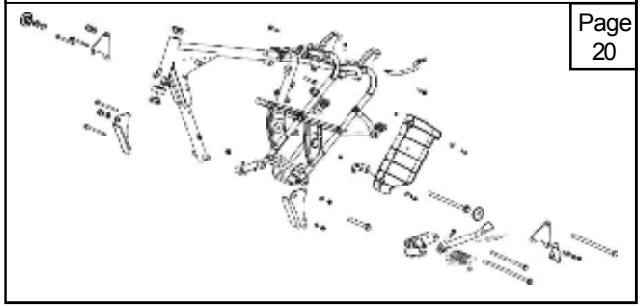

01 - 25 Frame RH - Classic Models Page 26

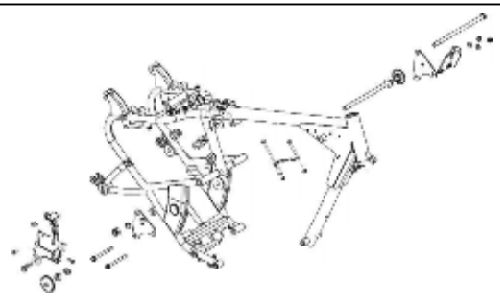

01 - 30 Frame LH - Continental GT Page 30

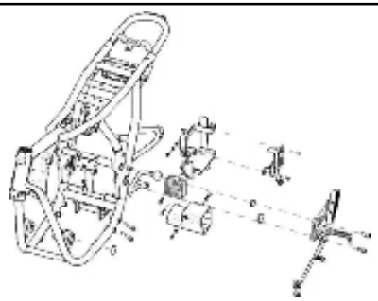

01 - 35 Frame RH - Continental GT Page 32

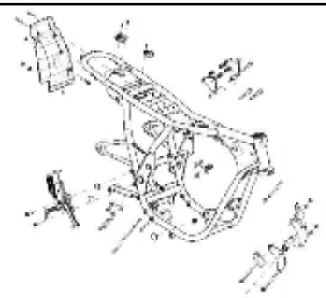

02 - 10 Filter Box Assy - Bullet EFI & Classic Models Page 36

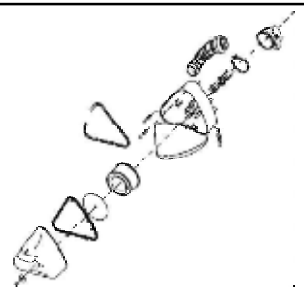

02 - 15 Airfilter Assembly - Continental GT Page 40

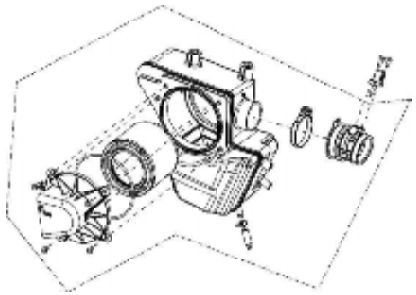

03 - 10 Solenoid & Reed Valve Assembly Page 42

GROUP INDEX - PICTORIAL

04 - 10 Exhaust Pipe & Silencer Page 44

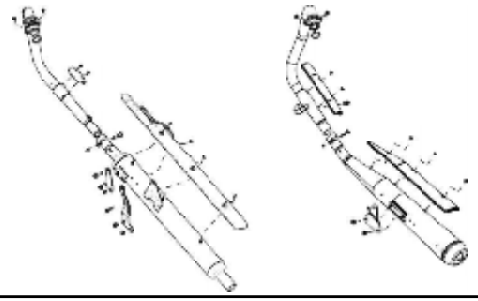

05 - 10 Fuel Tank - Bullet EFI & Classic Models Page 48

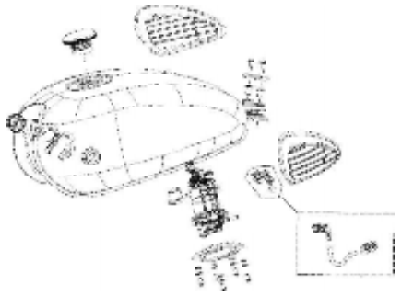

05 - 15 Fuel Tank - Continental GT Page 52

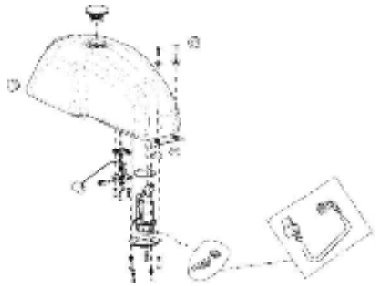

06 - 10 Evaporative Emissions - Bullet EFI & Classic Models Page 54

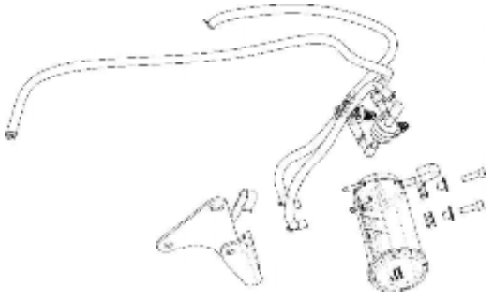

06 - 15 Evaporative Emissions - Continental GT Page 56

07 - 10 Seat Assy - Bullet EFI Models Page 58

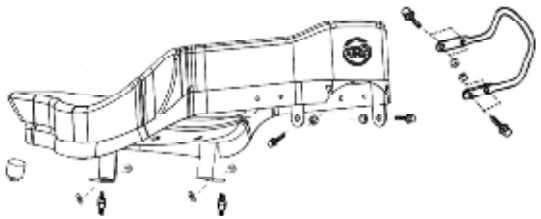

07 - 15 Seat Assy - Classic Models Page 60

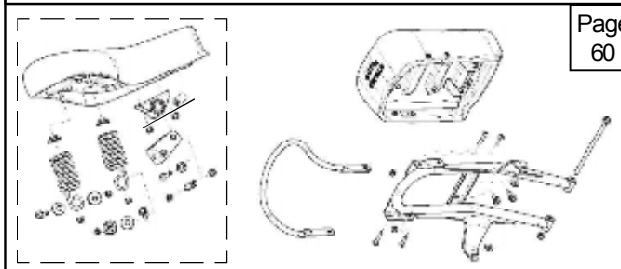

07 - 20 Seat Assy - Continental GT Page 64

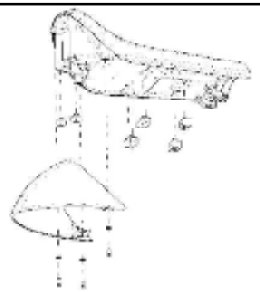

08 - 10 Handle Bar & Controls - Bullet EFI & Classic Models Page 66

GROUP INDEX - PICTORIAL

08 - 15 Handle Bar & Controls - Continental GT Page 68

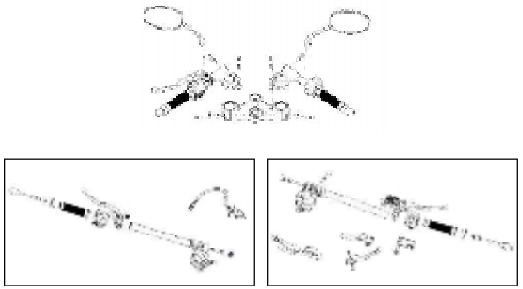

09 - 10 Control Cables Page 72

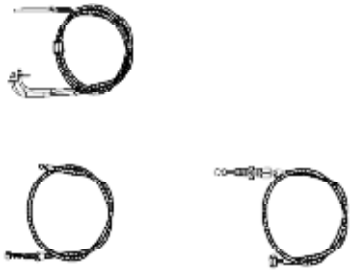

10-10 Steering Stem & Head Lamp Casing-Bullet EFI & Classic Models Page 74

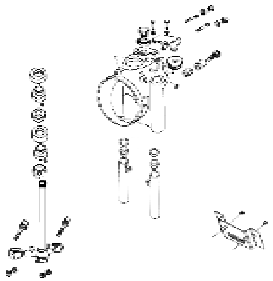

10 - 15 Steering Stem Assembly - Continental GT Page 78

11 - 10 Front Fork - Bullet EFI & Classic Models Page 80

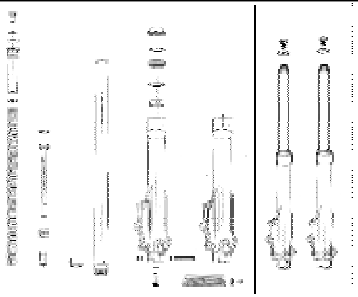

11 - 15 Front Fork - Continental GT Page 84

12 - 10 Front Mudguard - Bullet EFI & Classic Models Page 88

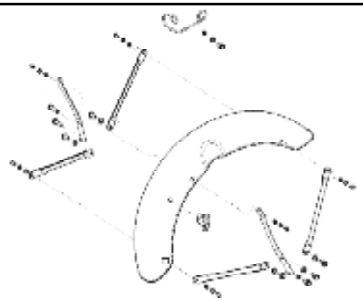

12 - 15 Front Mudguard - Continental GT Page 92

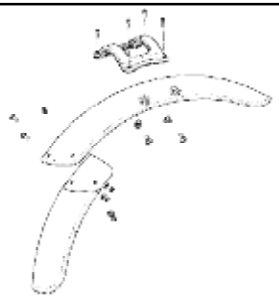

13 - 10 Front Wheel - Bullet EFI & Classic Models Page 94

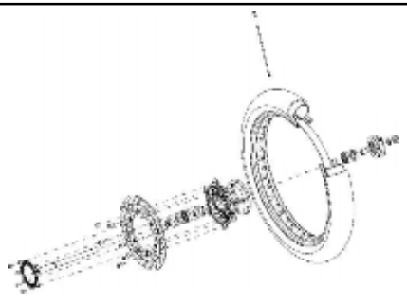

GROUP INDEX - PICTORIAL

13 - 15 Front Wheel - Continental GT Page 96

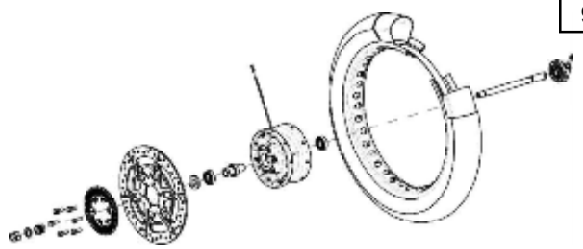

14 - 10 Rear Wheel - Bullet EFI & Classic Models Page 98

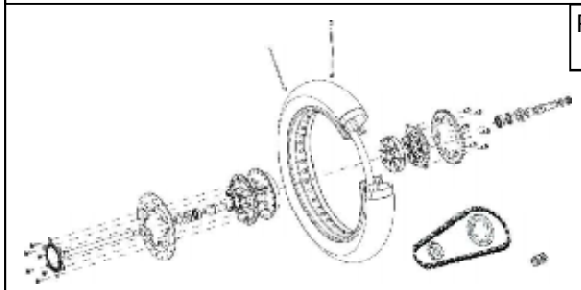

14 - 15 Rear Wheel - Continental GT Page 100

15 - 10 Antilock Brake System - Bullet EFI & Classic Models Page 106

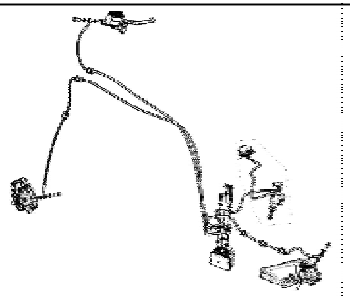

15 - 15 ABS MTG to Frame - Bullet EFI & Classic Models Page 108

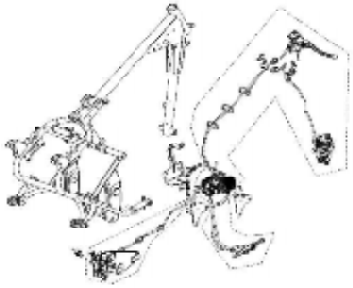

15 - 20 Anti Lock Brakes System - Continental GT Page 110

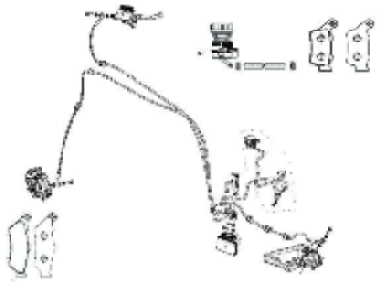

15 - 25 ABS Mounting to Frame - Continental GT Page 112

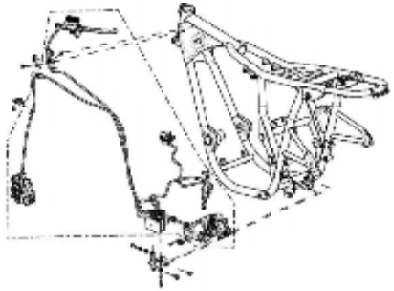

16 - 10 Swing Arm Assy - Bullet EFI & Classic Models Page 114

16 - 15 Swing Arm Assy - Continental GT Page 116

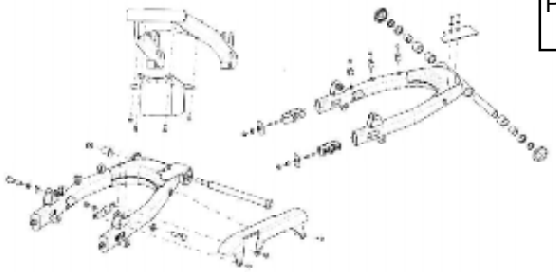

GROUP INDEX - PICTORIAL

16 - 20 Rear Shockabsorbers Page 120

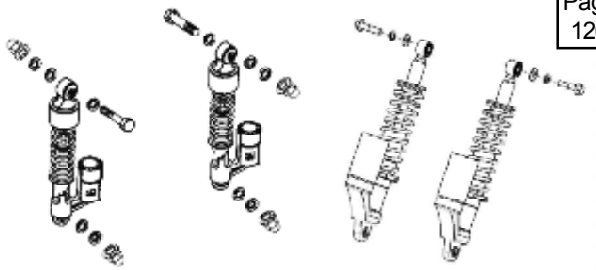

17 - 10 Rear Mudguard Assembly - Bullet EFI Models Page 122

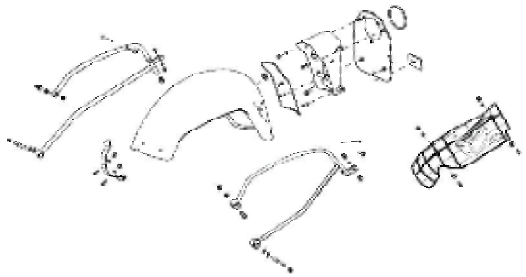

17 - 15 Rear Mudguard Assembly - Classic Models Page 126

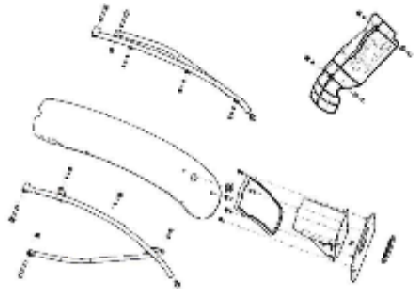

17 - 20 Rear Mudguard Assembly - Continental GT Page 130

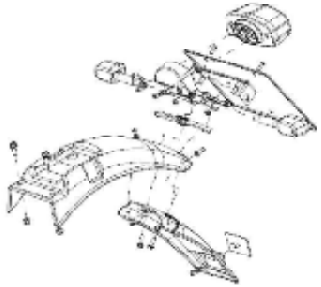

18 - 10 Center & Side Stands Page 132

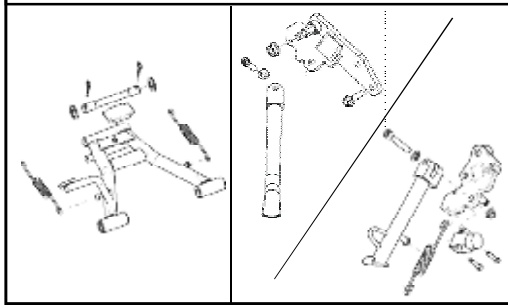

19-10 Foot Rests & Brake Pedal-Bullet EFI & Classic Models Page 136

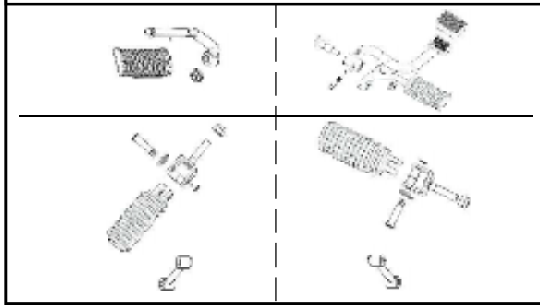

19 - 15 Foot Rests, Gear Shift & Brake Pedal-Continental GT Page 140

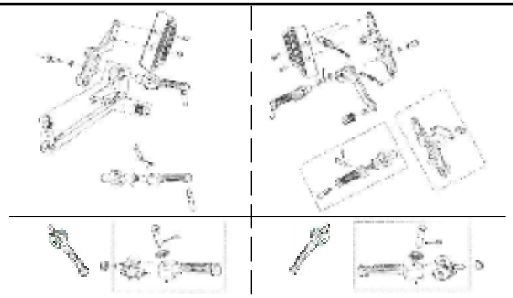

20 - 10 ABS Bracket - Bullet EFI & Classic Models Page 144

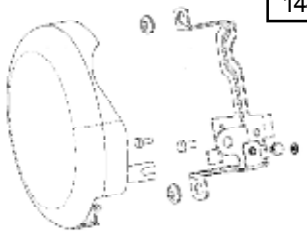

20 - 15 Utility Box - Continental GT Page 146

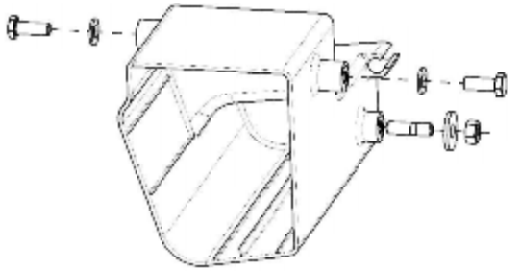

21 - 10 Side Panels - Continental GT

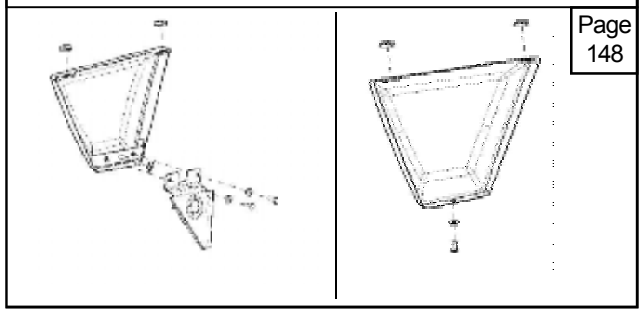

Page 148

22 - 10 Electrical Box - Bullet EFI & Classic Models

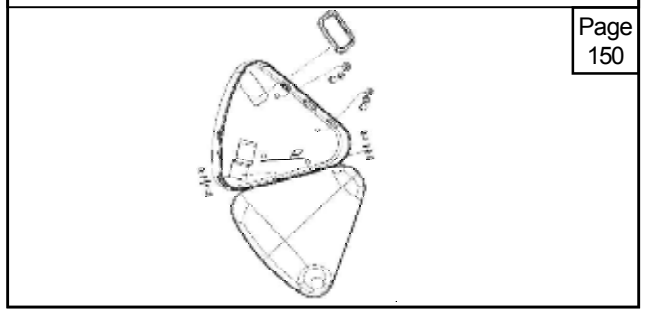

Page 150

23 - 10 Battery, Battery Carrier & Cover

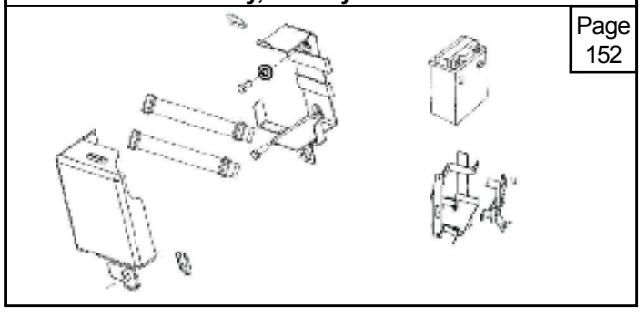

Page 152

24 - 10 Wiring Harness & Fuses

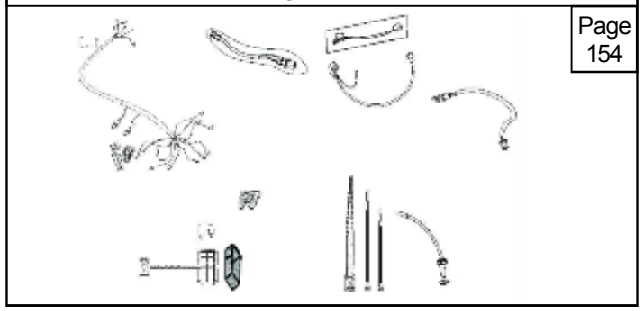

Page 154

25 - 10 Common key, Switches, Locks & Horn

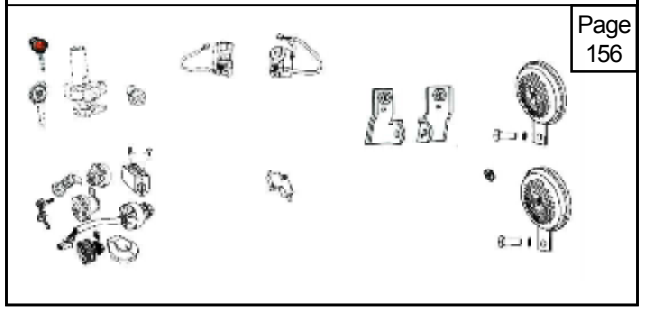

Page 156

26 - 10 Meters & Instrument Console

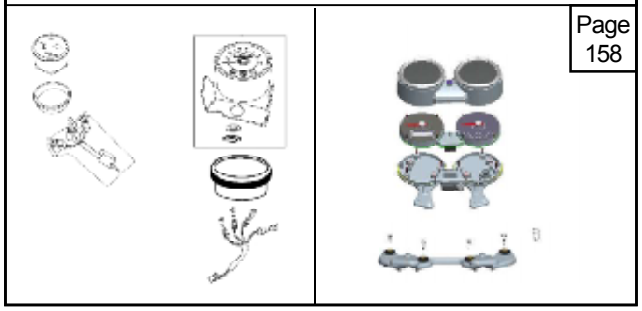

Page 158

27 - 10 Electronic Control Unit & Sensors

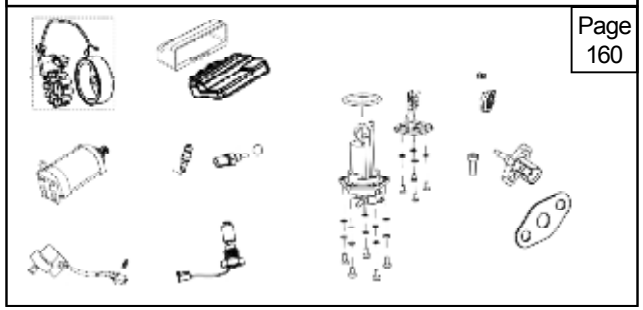

Page 160

28-10 RR Unit, Ignition Coil, Relays, Flasher Unit & Suppressor Cap

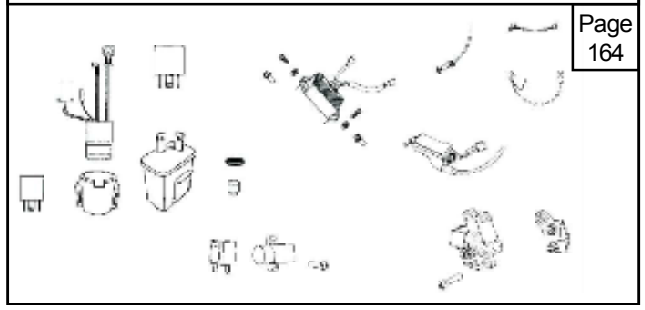

Page 164

29 - 10 Head Lamp & Pilot Lamp

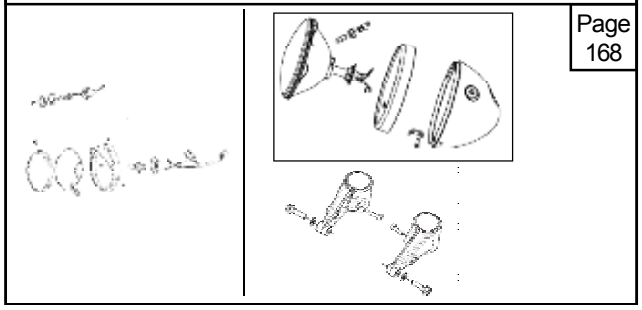

Page 168

GROUP INDEX - PICTORIAL

30 - 10 Trafficator Lights

Page 170

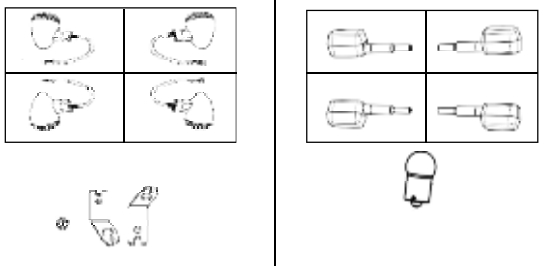

31 - 10 Tail Lamp

Page 172

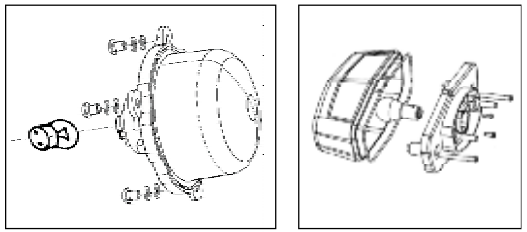

32 - 10 Tool Kit

Page 174

GROUP INDEX - PICTORIAL

01 - 10 FRAME LH - BULLET EFI MODELS

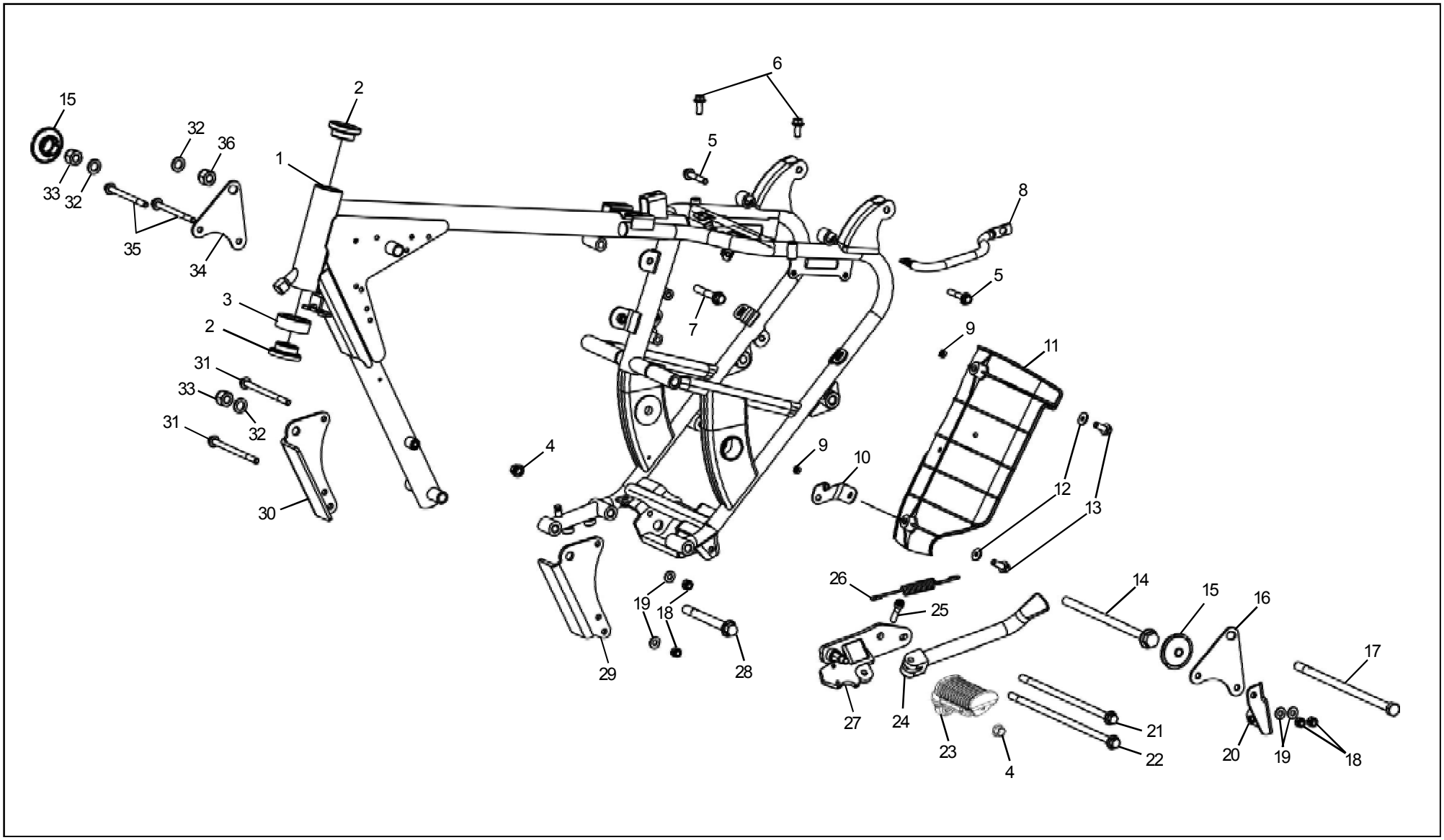

01 - 10 FRAME LH - BULLET EFI MODELS

Key No.	Part Number	Description	Qty	Bullet EFI	Classic				Conti GT	Remarks
					500	DS	BG	Chrome		
1	866259	Frame Assy.-Black	1	●						
2	144582/f	Ball Race, Frame	2	●						
3	145446/a	Cover	1	●						
4	593011/c	Flanged Hex. Nut M10 X 1.25	3	●						
5	593163/a	Flanged Hex Bolt M8 X 1.25 X 45	2	●						
6	586002/a	Flanged Hex. Bolt M8 X 20 (Dual seat Mounting)	2	●						
7	593010/c	Flanged Hex Bolt M10 X 1.25 X 60	1	●						
8	111686/a	Side Handle - Black Powder Coated	1	●						
9	586029/a	Hexagonal Nut M6 X 1	2	●						
10	801530	Piece Mudguard Mtg.	1	●						
11	1010063/b	Piece Mudguard	1	●						
12	586035/a	Plain Washer, M6	2	●						
13	141044	Hex Bolt M6 X 35	2	●						
14	580347/d	Flanged Hex Bolt - 1/2" X 240 (Swing Arm)	1	●						
15	591073/a	Cap – Swing Pivot	2	●						
16	801620	Engine Mounting Plate - Rear LH Black	1	●						
17	593022/c	Hex Bolt M12 X 226	1	●						
18	586004/a	Hex Nut With Nylon Insert, M8 X 9.5	4	●						
19	586036/a	Washer	4	●						
20	1010048/c	Bracket Assy Canister	1	●						
21	593021/b	Flanged Hex Bolt M10 X 1.25 X 260	1	●						
22	593020/b	Flange Hex Bolt M10 X 1.25 X 288	1	●						
23	801459	Foot Rest Arm – LH Black Powder Coated	1	●						
24	583866/b	Side Stand Assy	1	●						

01 - 10 FRAME LH - BULLET EFI MODELS

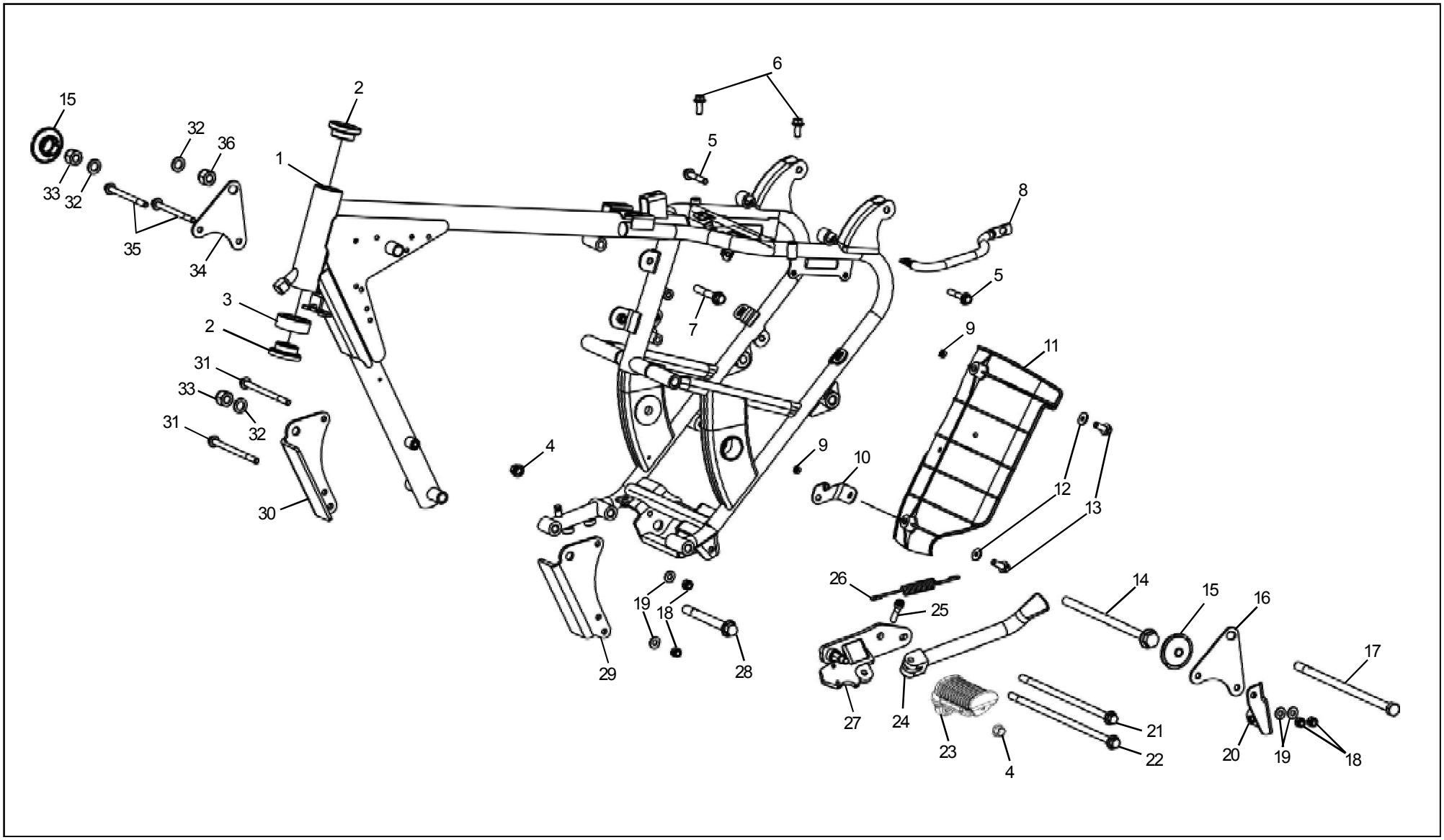

01 - 10 FRAME LH - BULLET EFI MODELS

Key No.	Part Number	Description	Qty	Bullet EFI	Classic				Conti GT	Remarks
					500	DS	BG	Chrome		
25	521199	Hex.Socket Head Screw M8 X 1.25 X 40	1	●						
26	591992/b	Spring - Side Stand	1	●						
27	866255	Sidestand Mtg Comp.-Black	1	●						
28	593049/c	Flanged Hex. Bolt 1/2" X 120	1	●						
29	801527	Engine Mounting Bracket - Front LH Black	1	●						
30	801528	Engine Mounting Bracket - Front RH Black	1	●						
31	593060/c	Flanged Hex Bolt M8 X 1.25 X 120	2	●						
32	586008/a	Plain Washer M12	3	●						
33	593050/c	Hex Nylock Nut 1/2"	2	●						
34	866260	Engine Mtg Plate - Rear RH Black	1	●						
35	593061/c	Flanged Hex Bolt M8 X 1.25 X 100	2	●						
36	593024/d	Hex Nut With Nylock M12	1	●						

01 - 15 FRAME RH - BULLET EFI MODELS

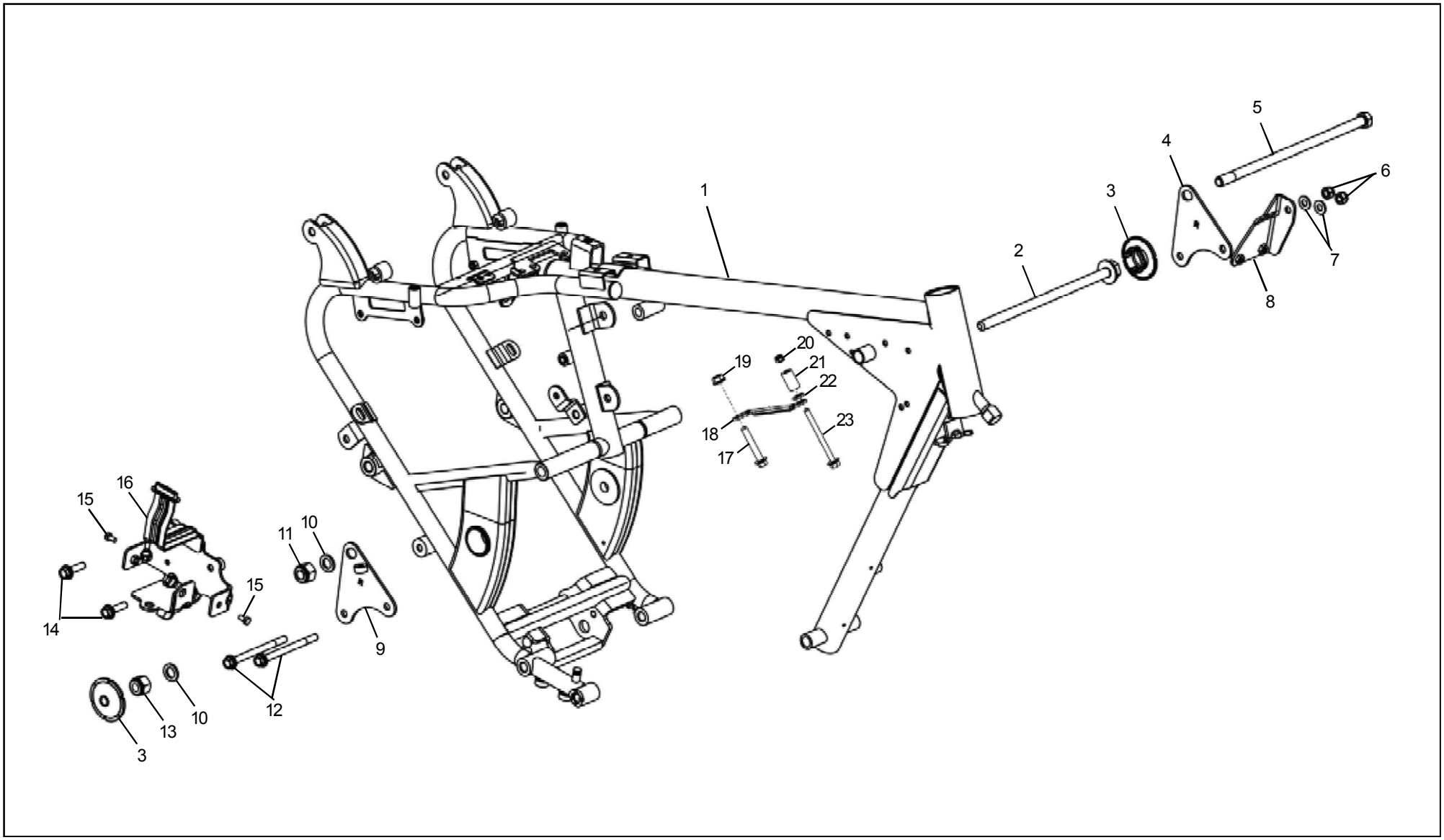

01 - 15 FRAME RH - BULLET EFI MODELS

Key No.	Part Number	Description	Qty	Bullet EFI	Classic				Conti GT	Remarks
					500	DS	BG	Chrome		
1	866259	Frame Assy.-Black	1	●						
2	580347/d	Flanged Hex Bolt - 1/2" X 240 (Swing Arm)	1	●						
3	591073/a	Cap – Swing Pivot	2	●						
4	801620	Engine Mounting Plate - Rear LH Black	1	●						
5	593022/c	Hex Bolt M12 X 226	1	●						
6	586004/a	Hex Nut With Nylon Insert, M8 X 9.5	2	●						
7	586036/a	Washer	2	●						
8	1010048/c	Bracket Assy - Canister	1	●						
9	866260	Engine Mtg Plate - Rear RH Black	1	●						
10	586008/a	Plain Washer M12	2	●						
11	593024/d	Hex Nut With Nylock M12	1	●						
12	593061/c	Flanged Hex Bolt M8 X 1.25 X 100	2	●						
13	593050/c	Hex Nylock Nut 1/2"	1	●						
14	586003/a	Hex Flange Bolt M8 X 1.25 X 30	2	●						
15	142274	Hex Screw M6 X 16	2	●						
16	1010190/b	Bracket Assy - Abs & Cover	1	●						
17	593010/c	Flanged Hex Bolt M10 X 60	1	●						
18	593067/b	Steady Bracket	1	●						
19	593011/c	Flanged Hex. Serrated Nut M10 X 1.5	1	●						
20	586004/a	Hex Nylock Nut M8 X 9.5	1	●						
21	570263/b	Spacer	1	●						
22	586056/a	Spacer washer Steady Bracket	1	●						
23	586024/a	Flanged Hex. Bolt M8 X 60	1	●						

01 - 20 FRAME LH - CLASSIC MODELS

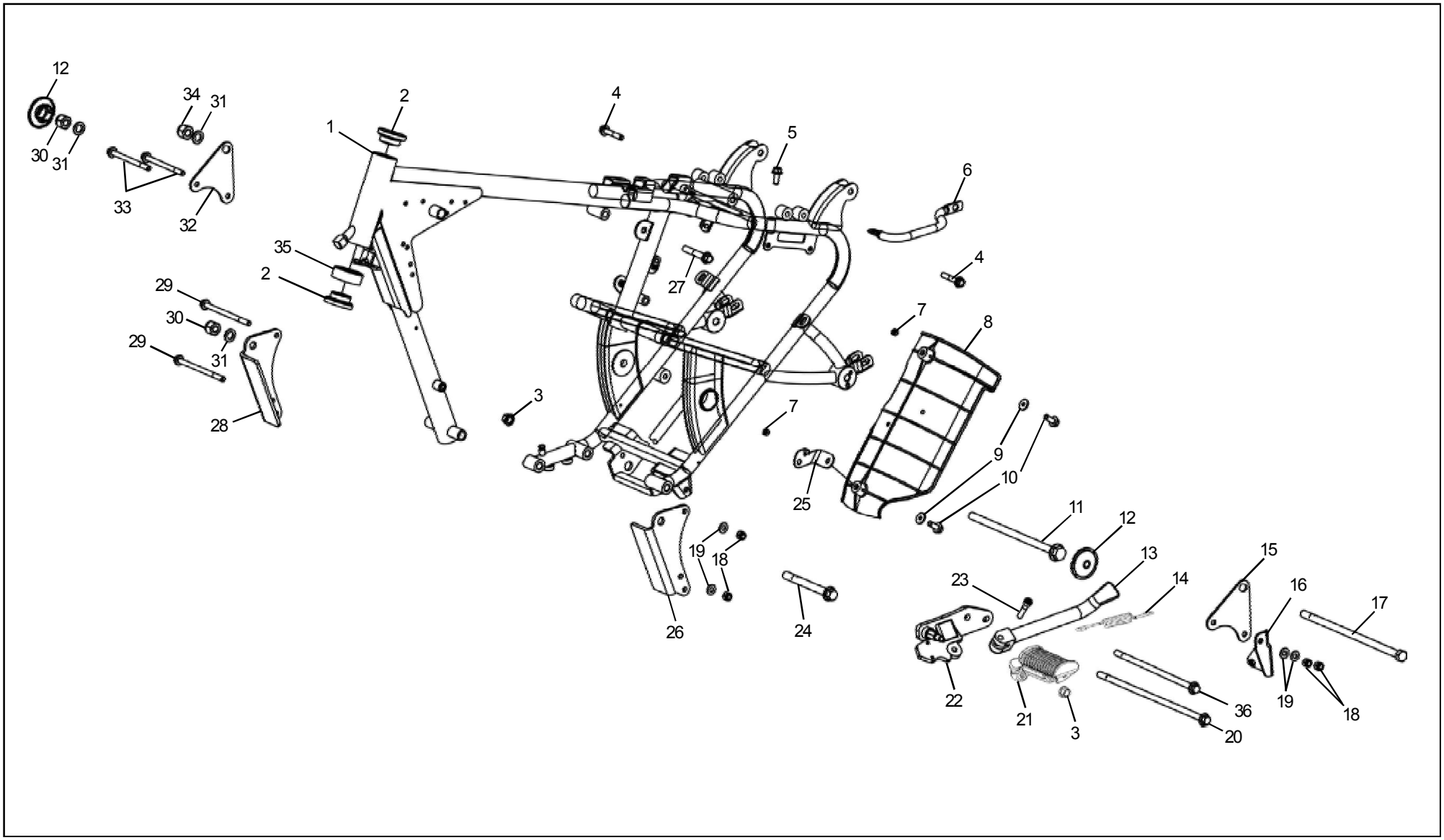

01 - 20 FRAME LH - CLASSIC MODELS

Key No.	Part Number	Description	Qty	Bullet EFI	Classic				Conti GT	Remarks
					500	DS	BG	Chrome		
1	801618	Frame Assembly - Black	1		●			●		
	858061	Frame Assembly - Squadron Blue	1		●					
	873107	Frame Assembly - Desert Storm	1			●				
	825581	Frame Assembly - Olive Green	1				●			
2	144582/f	Ball Race, Frame	2		●	●	●	●		
3	593011/c	Flanged Hex. Nut M10 X 1.25	3		●	●	●	●		
4	593163/a	Flanged Hex Bolt M8 X 1.25 X 45	2		●	●	●	●		
5	586002/a	Flanged Hex. Bolt M8 X 20	1		●	●	●	●		
6	111686/a	Side Handle, Black Powder Coated	1		●			●		
	858021	Side Handle, Squadron Blue	1		●					
	873015	Side Handle, Desert Storm	1			●				
	825178	Side Handle, Olive Green	1				●			
7	586029/a	Hexagonal Nut M6 X 1	2		●	●	●	●		
8	1010063/b	Piece Mudguard	1		●	●	●	●		
9	586035/a	Plain Washer, M6	2		●	●	●	●		
10	141044	Hex Bolt M6 X 35 - Is :1364 (Part 1) - 4.6 -Zn.Pl	2		●	●	●	●		
11	580347/d	Flanged Hex Bolt - 1/2" X 240 (Swing Arm)	1		●	●	●	●		
12	591073/a	Cap – Swing Pivot	2		●	●	●	●		
13	583866/b	Side Stand Assy	1		●	●	●	●		
14	591992/b	Spring - Side Stand	1		●	●	●	●		
15	801620	Engine Mounting Plate Rear LH, Black	1		●			●		
	858059	Engine Mounting Plate Rear LH,Squadron Blue	1		●					
	873105	Engine Mounting Plate Rear LH,Desert Storm	1			●				
	825578	Engine Mounting Plate Rear LH,Olive Green	1				●			

01 - 20 FRAME LH - CLASSIC MODELS

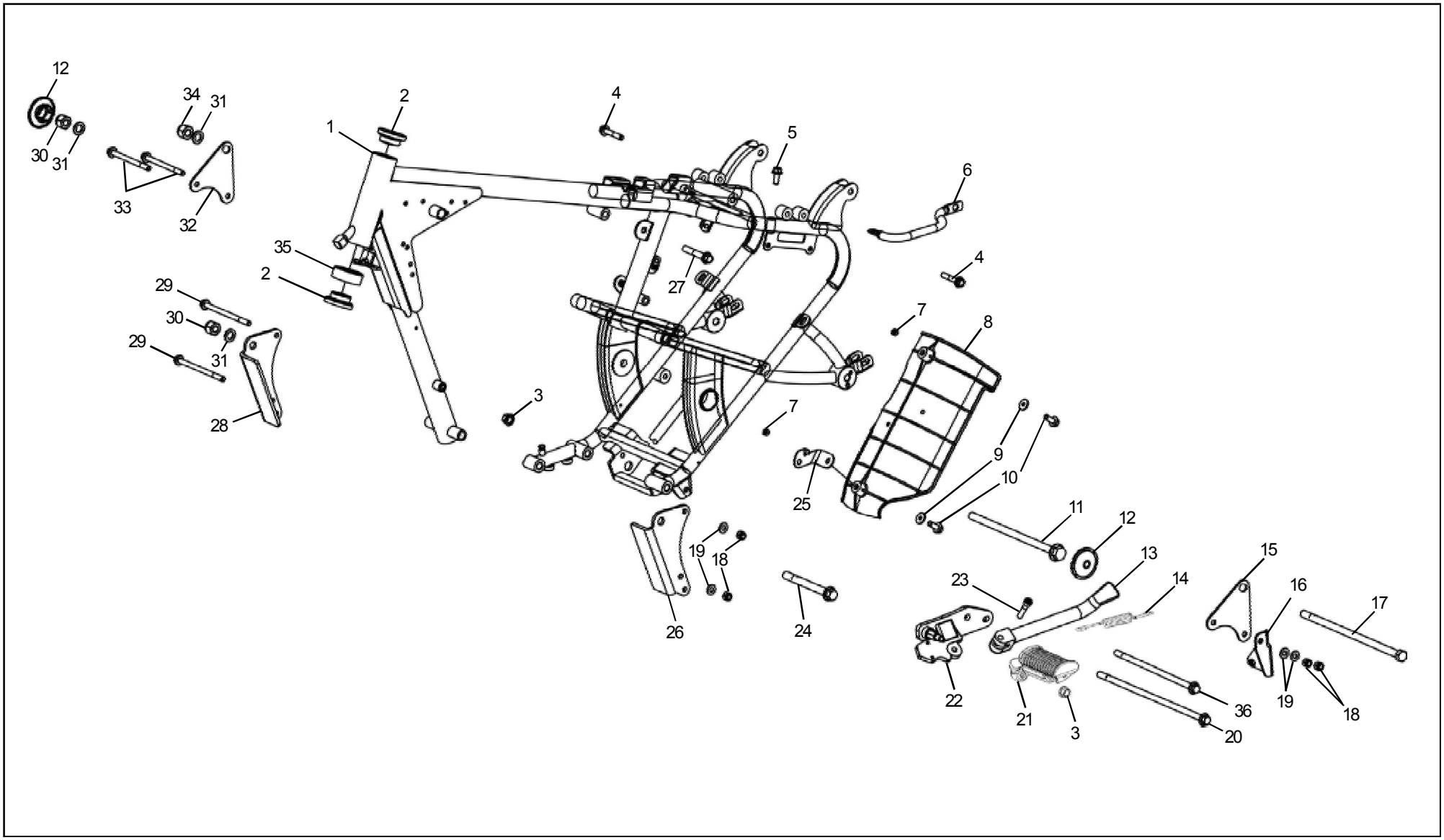

01 - 20 FRAME LH - CLASSIC MODELS

Key No.	Part Number	Description	Qty	Bullet EFI	Classic				Conti GT	Remarks
					500	DS	BG	Chrome		
16	1010048/c	Bracket Assy Canister	1		●	●	●	●		
17	593022/c	Hex Bolt M12 X 226	1		●	●	●	●		
18	586004/a	Hex Nut With Nylon Insert,M8 X 9.5	4		●	●	●	●		
19	586036/a	Washer	4		●	●	●	●		
20	593020/b	Flange Hex Bolt M10 X 1.25 X 288	1		●	●	●	●		
21	801459	Foot Rest Arm LH, Black Powder Coated	1		●			●		
	858034	Foot Rest Arm LH, Squadron Blue	1		●					
	873009	Foot Rest Arm LH, Desert Storm	1			●				
	825374	Foot Rest Arm LH, Olive Green	1				●			
22	866255	Sidestand Mtg Complete - Black	1		●			●		
	858072	Sidestand Mtg Complete - Squadron Blue	1		●					
	873117	Sidestand Mtg Complete - Desert Storm	1			●				
	825595	Sidestand Mtg Complete - Olive Green	1				●			
23	521199	Hex_Socket Head Screw M8X1.25X40	1		●	●	●	●		
24	593049/c	Flanged Hex. Bolt 1/2" X 120	1		●	●	●	●		
25	801530	Piece Mudguard Mtg.	1		●	●	●	●		
26	801527	Engine Mounting Plate Front LH, Black	1		●			●		
	858036	Engine Mounting Plate Front LH, Squadron Blue	1		●					
	873051	Engine Mounting Plate Front LH, Desert Storm	1			●				
	825624	Engine Mounting Plate Front LH, Olive Green	1				●			
27	593010/c	Flanged Hex Bolt M10 X 1.25 X 60	1		●	●	●	●		
28	801528	Engine Mounting Plate Front RH, Black	1		●			●		
	858037	Engine Mounting Plate Front RH, Squadron Blue	1		●					
	873024	Engine Mounting Plate Front RH, Desert Storm	1			●				

01 - 20 FRAME LH - CLASSIC MODELS

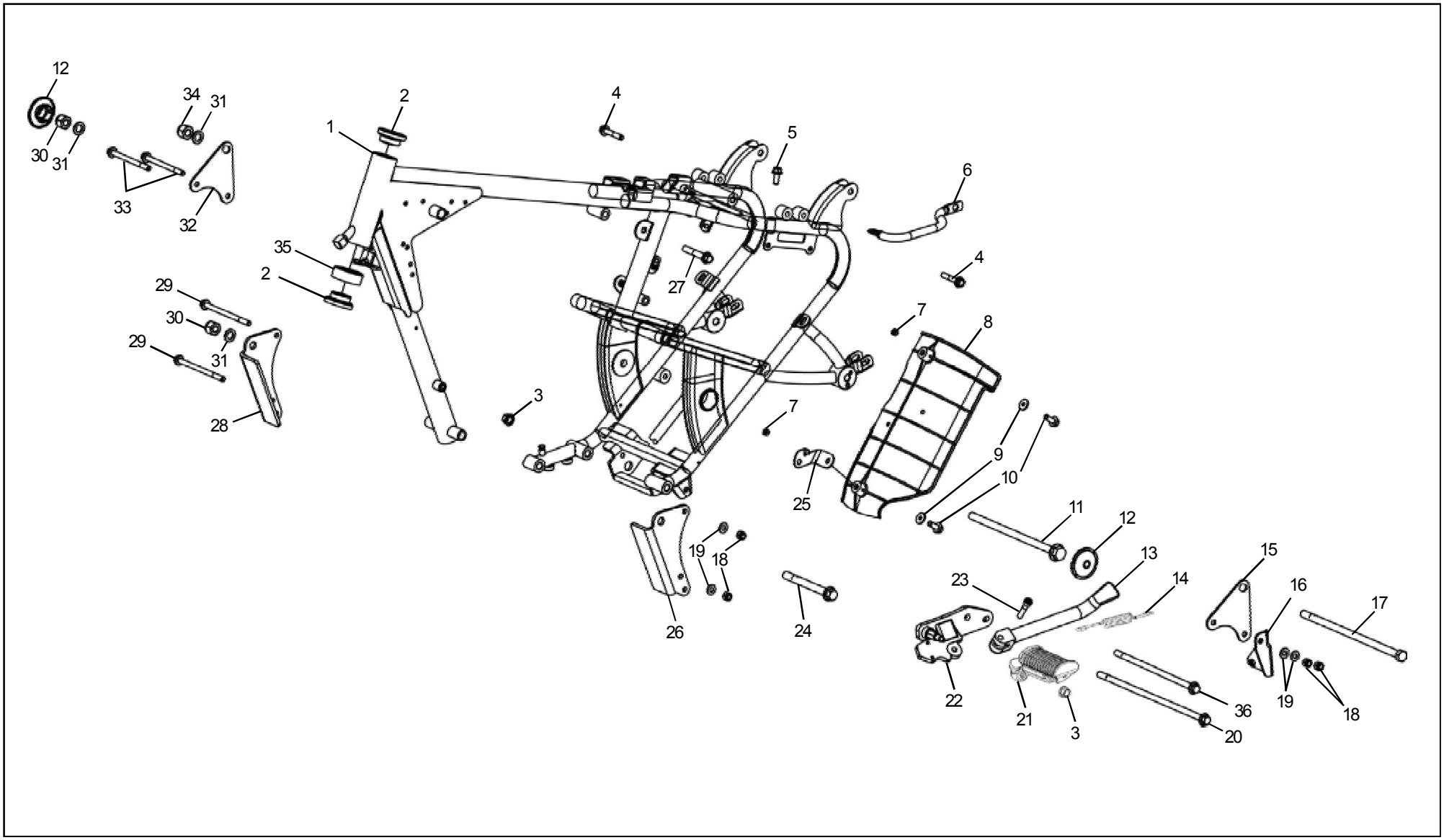

01 - 20 FRAME LH - CLASSIC MODELS

Key No.	Part Number	Description	Qty	Bullet EFI	Classic				Conti GT	Remarks
					500	DS	BG	Chrome		
28	825625	Engine Mounting Plate Front RH, Olive Green	1				●			
29	593060/c	Flanged Hex Bolt M8 X 1.25 X 120	2		●	●	●	●		
30	593050/c	Hex Nylock Nut 1/2"	2		●	●	●	●		
31	586008/a	Plain Washer M12	3		●	●	●	●		
32	866260	Engine Mounting Plate Rear RH, Black	1		●			●		
	858074	Engine Mounting Plate Rear RH, Squadron Blue	1		●					
	873121	Engine Mounting Plate Rear RH, Desert Storm	1			●				
	825601	Engine Mounting Plate Rear RH, Olive Green	1				●			
33	593061/c	Flanged Hex Bolt M8 X 1.25 X 100	2		●	●	●	●		
34	593024/d	Hex Nut With Nylock M12	1		●	●	●	●		
35	145446/a	Cover	1		●	●	●	●		
36	593021/b	Flanged Hex Bolt M10 X 1.25 X 260	1		●	●	●	●		

01 - 25 FRAME RH - CLASSIC MODELS

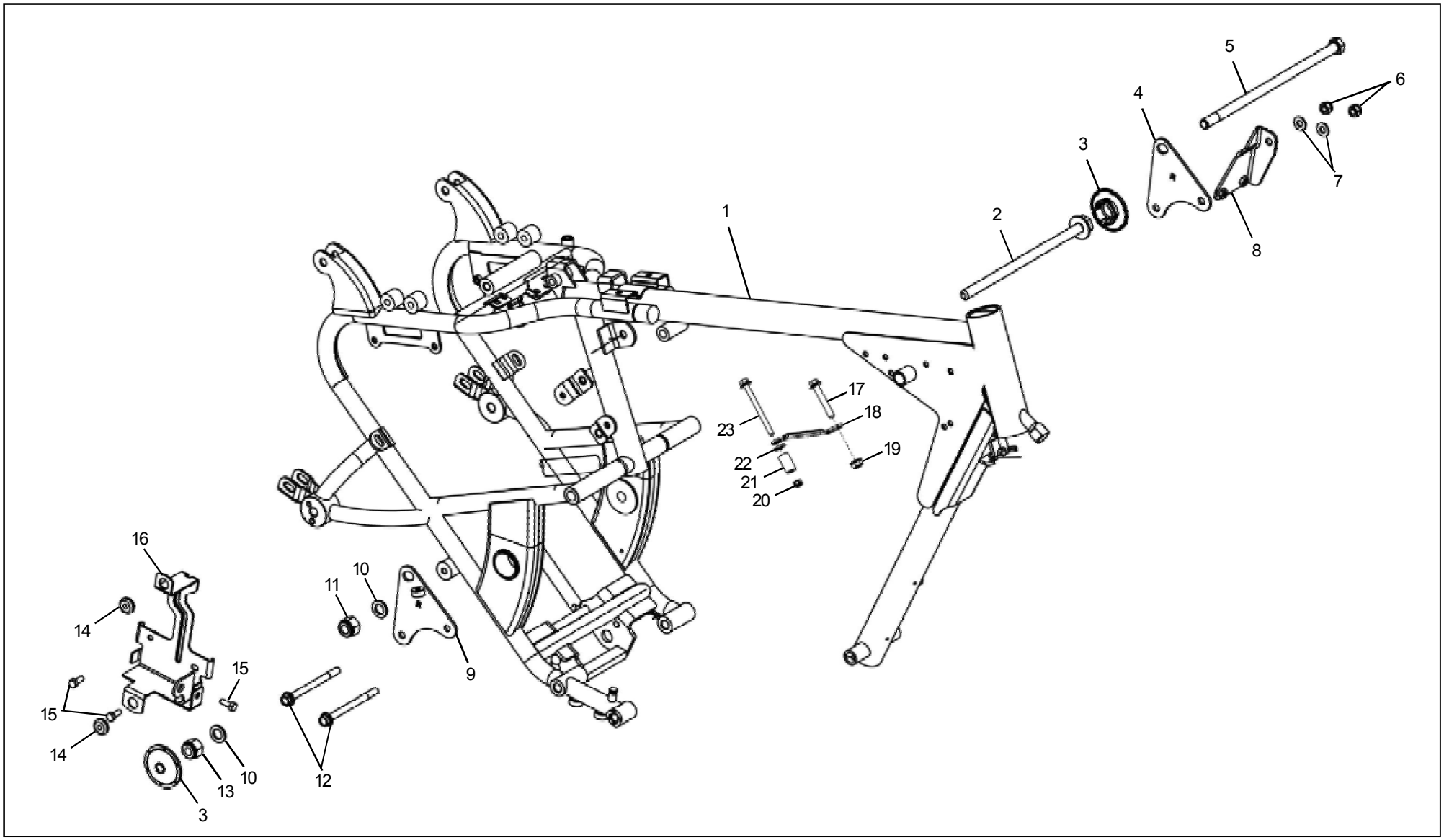

01 - 25 FRAME RH - CLASSIC MODELS

Key No.	Part Number	Description	Qty	Bullet EFI	Classic				Conti GT	Remarks
					500	DS	BG	Chrome		
1	801618	Frame Assembly - Black	1		●			●		
	858061	Frame Assembly - Squadron Blue	1		●					
	873107	Frame Assembly - Desert Storm	1			●				
	825581	Frame Assembly - Olive Green	1				●			
2	580347/d	Flanged Hex Bolt - 1/2" X 240 (Swing Arm)	1		●	●	●	●		
3	591073/a	Cap – Swing Arm Pivot	2		●	●	●	●		
4	801620	Engine Mounting Plate Rear LH, Black	1		●			●		
	858059	Engine Mounting Plate Rear LH,Squadron Blue	1		●					
	873105	Engine Mounting Plate Rear LH,Desert Storm	1			●				
	825578	Engine Mounting Plate Rear LH,Olive Green	1				●			
5	593022/c	Hex Bolt M12 X 266	1		●	●	●	●		
6	586004/a	Hex Nut With Nylon Insert, M8 X 9.5	2		●	●	●	●		
7	586036/a	Washer	2		●	●	●	●		
8	1010048/c	Bracket Assy - Canister	1		●	●	●	●		
9	866260	Engine Mounting Plate Rear RH, Black	1		●			●		
	858074	Engine Mounting Plate Rear RH, Squadron Blue	1		●					
	873121	Engine Mounting Plate Rear RH, Desert Storm	1			●				
	825601	Engine Mounting Plate Rear RH, Olive Green	1				●			
10	586008/a	Plain Washer M12	2		●	●	●	●		
11	593024/d	Hex Nut With Nylock M12	1		●	●	●	●		
12	593061/c	Flanged Hex Bolt M8 X 1.25 X 100	2		●	●	●	●		
13	593050/c	Hex Nylock Nut 1/2"	1		●	●	●	●		
14	521088/c	Grommet	1		●	●	●	●		
15	142274	Hex Screw M6 X 16	3		●	●	●	●		

01 - 25 FRAME RH - CLASSIC MODELS

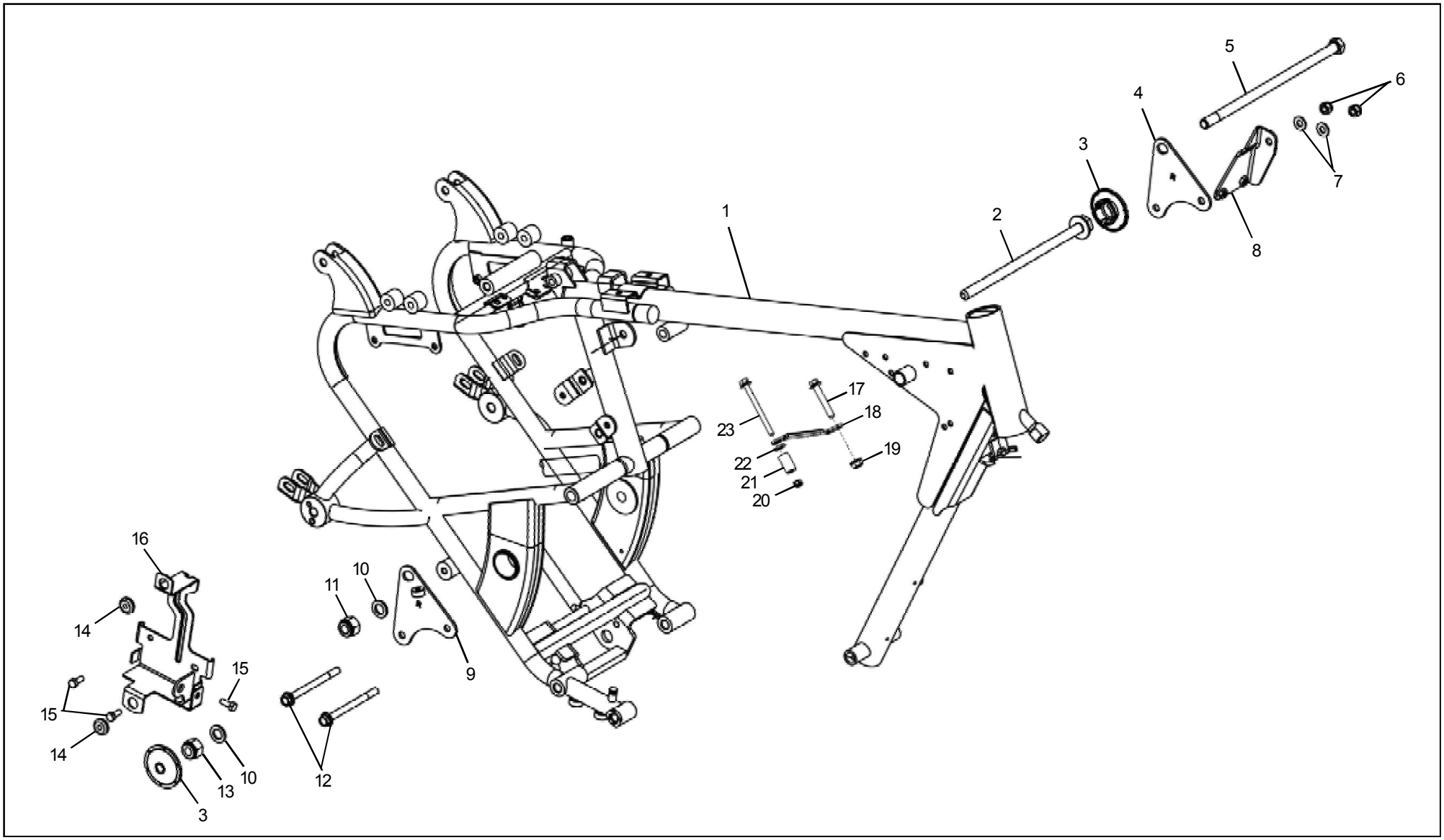

01 - 25 FRAME RH - CLASSIC MODELS

Key No.	Part Number	Description	Qty	Bullet EFI	Classic				Conti GT	Remarks
					500	DS	BG	Chrome		
16	866234	Bracket Assy, ABS, Black	1		●			●		
	858075	Bracket Assy, ABS, Squadron Blue	1		●					
	873122	Bracket Assy, ABS, Desert Storm	1			●				
	825602	Bracket Assy, ABS, Olive Green	1				●			
17	593010/c	Flanged Hex Bolt M10 X 60	1		●	●	●	●		
18	593067/b	Steady Bracket	1		●	●	●	●		
19	593011/c	Flanged Hex. Serrated Nut M10 X 1.5	1		●	●	●	●		
20	586004/a	Hex Nylock Nut M8 X 9.5	1		●	●	●	●		
21	570263/b	Spacer	1		●	●	●	●		
22	586056/a	Spacer washer Steady Bracket	1		●	●	●	●		
23	586024/a	Flanged Hex. Bolt M8 X 60	1		●	●	●	●		

01 - 30 FRAME LH - CONTINENTAL GT

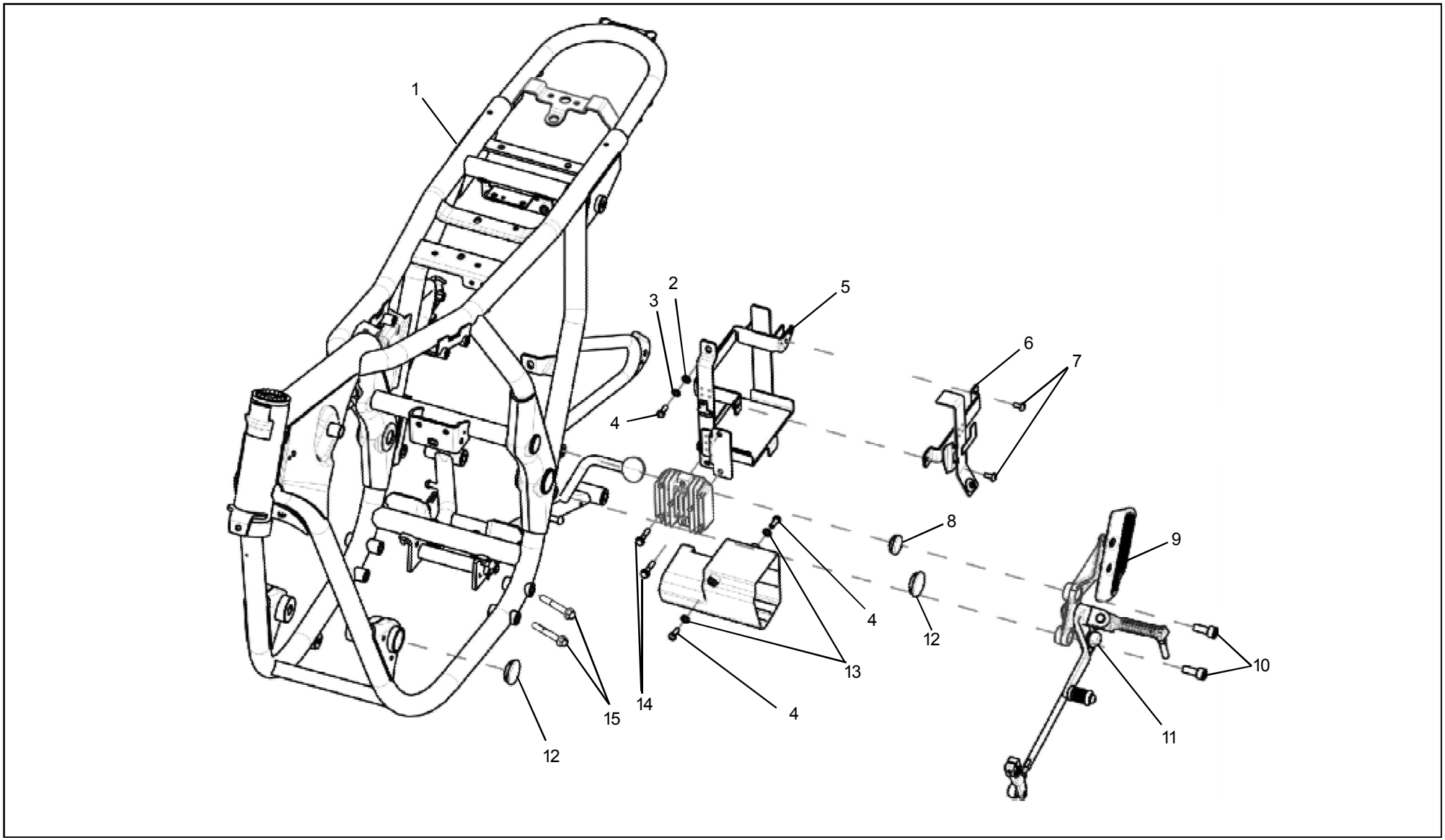

01 - 30 FRAME LH - CONTINENTAL GT

Key No.	Part Number	Description	Qty	Bullet EFI	Classic				Conti GT	Remarks
					500	DS	BG	Chrome		
1	867060	Frame Assembly	1						●	
2	586032/b	Plain Washer	1						●	
3	140129/a	Lock Washer-Internal Teeth	1						●	
4	142274/b	Hex Screw M6 X 1 X 16	3						●	
5	1010149/b	Battery Carrier Assy	1						●	
6	585265/e	Front Plate Assy	1						●	
7	593232/a	Philips Round Head Machined Screw M6 X 13	2						●	
8	585809/b	Cap-Frame	2						●	
9	859066	Heel Guard LH Rider	1						●	
10	585614/a	Allen Head Hex Bolt M10 X 1.25 X 25	4						●	
11	585581/a	Rider Foot Rest Kit Comp LH	1						●	
12	585808/a	Dust Cap - Frame	4						●	
13	141061/2	Punched Washer 6.4	2						●	
14	591577/b	Flanged Hex Bolt M6 X 1 X 27	2						●	
15	594545/a	Flanged Hex Bolt M10 X 1.25 X 75	4						●	
16	585180/A	Side Handle Assy LH	1						●	

01 - 35 FRAME RH - CONTINENTAL GT

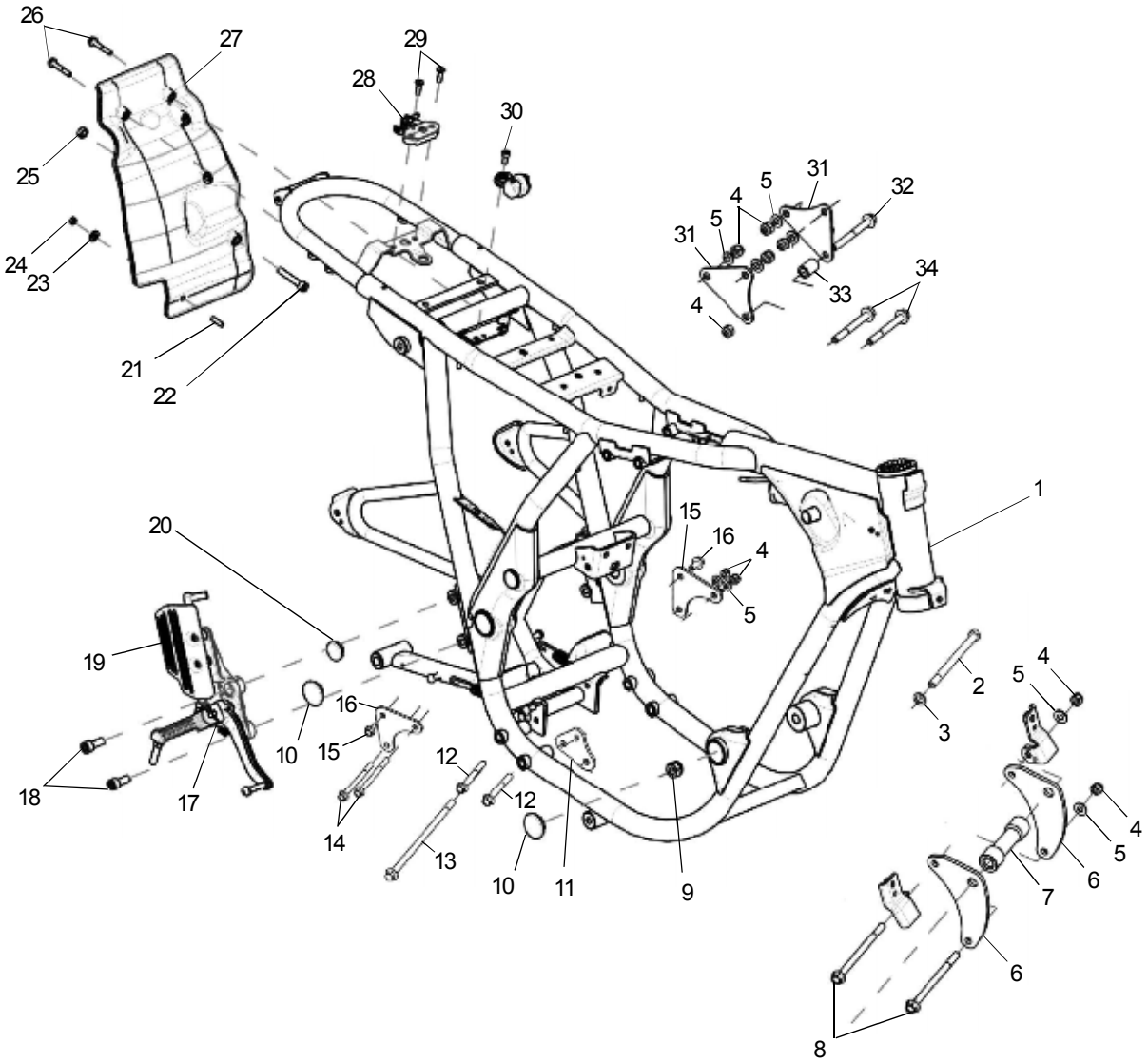

01 - 35 FRAME RH - CONTINENTAL GT

Key No.	Part Number	Description	Qty	Bullet EFI	Classic				Conti GT	Remarks
					500	DS	BG	Chrome		
1	867060	Frame Assy	1						●	
2	585276/b	Hex. Bolt M12 X 1.5 X 150	1						●	
3	586008/a	Plain Washer M12	1						●	
4	586004/a	Hex. Nut with Nylon Insert - M8	9						●	
5	586036/a	Plain Washer	8						●	
6	859056	Bracket - Engine MTG Front (Metalic Silver)	2						●	
7	859057	Tube - Engine Front MTG	1						●	
8	593060/c	Flanged Hex. Bolt, M8 X 120	2						●	
9	591389/a	Hex. Nut M12 X 1.5 with Nyloc Insert	1						●	
10	585808/a	Dust Cap - Frame	2						●	
11	859060	Engine Mounting Bracket Bottom - RH	1						●	
12	594545/a	Flanged Bolt M10 X 1.25 X 75	4						●	
13	585429/a	Flanged Hex. Bolt M10 X 210	1						●	
14	593061/c	Flanged Hex. Bolt M8 X 100	2						●	
15	591534/a	Flanged Hex. Bolt M8 X 16	2						●	
16	859058	Engine Rear Top MTG BKT (Metalic Silver)	2						●	
17	585580/a	Rider Foot Rest Kit Comp RH	1						●	
18	585614/a	Allen Head Hex Bolt M10 X 1.25 X 25	4						●	
19	859071	Heel Guard Rider	1						●	
20	585809/b	Cap - Frame	1						●	
21	145103/a	Stud	1						●	
22	521199	Socket Head Cap Screw M8 X 50	1						●	
23	593028/b	Plain Washer,M8	1						●	
24	141060/a	Hexagon Nut	1						●	

01 - 35 FRAME RH - CONTINENTAL GT

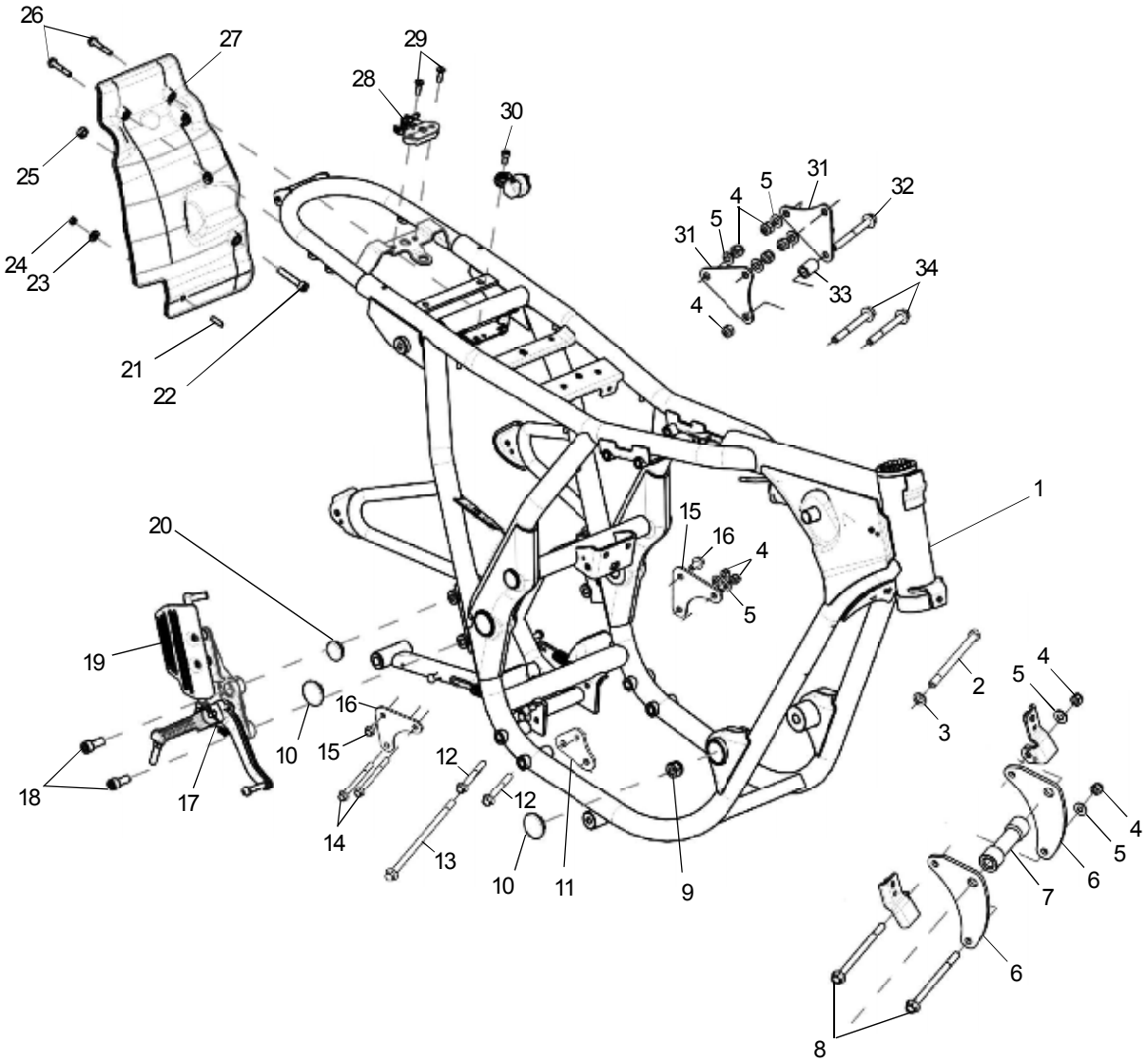

01 - 35 FRAME RH - CONTINENTAL GT

Key No.	Part Number	Description	Qty	Bullet EFI	Classic				Conti GT	Remarks
					500	DS	BG	Chrome		
25	141051/a	Hex.Nut M8	1						●	
26	591578/a	Flanged Hex Bolt M6 X 1 X 35	2						●	
27	585294/e	Piece Mudguard	1						●	
28	585606/a	Seat Latch	1						●	
29	594660/a	Counter Sink Screw M6 X 1 X 20	2						●	
30	590906/c	Hex Socket Head Screw M6 X 1 X 14	1						●	For Roll over Sensor Mounting
31	859059	Steady Bracket - RH (Metalic Silver)	2						●	
32	591462/a	Flanged Hex. Bolt M8X75	4						●	
33	585655/a	Spacer - Steady MTG Bracket	1						●	
34	580545/a	Flanged Hex. Bolt M8 X 70	4						●	

02 - 10 FILTER BOX ASSEMBLY - BULLET EFI & CLASSIC MODELS

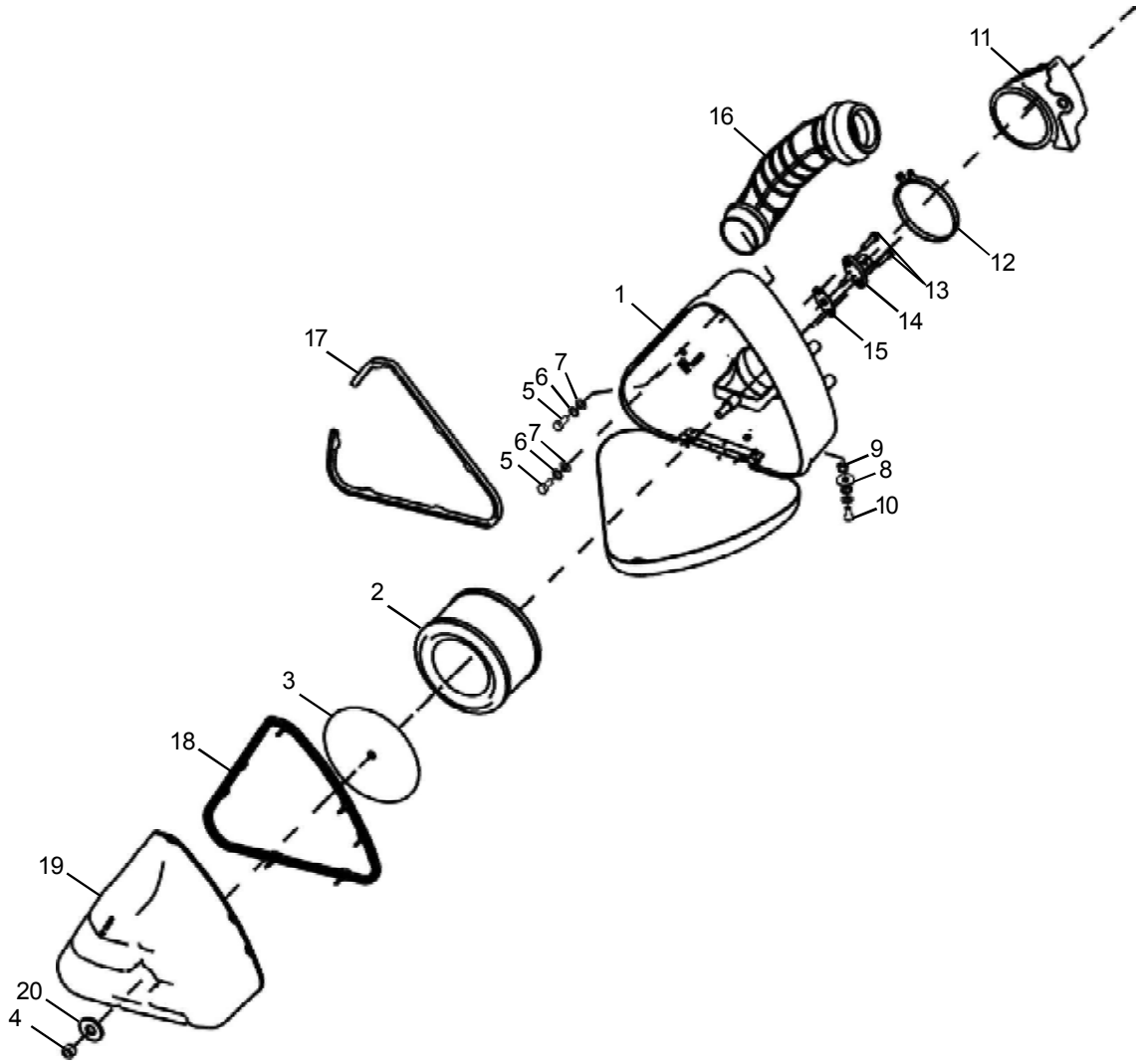

02 - 10 FILTER BOX ASSEMBLY - BULLET EFI & CLASSIC MODELS

Key No.	Part Number	Description	Qty	Bullet EFI	Classic				Conti GT	Remarks
					500	DS	BG	Chrome		
1	866263	Air Filter Box Assembly with sticker,Black	1	●						
	880071	Air Filter Box Assembly with sticker,Forest Green	1	●						
	806137	Air Filter Box Assembly with sticker,Marsh Gray	1	●						
	866247	Air Filter Box Assembly with sticker,Black	1		●					
	881041	Air Filter Box Assembly with sticker,Tan	1		●					
	818036	Air Filter Box Assembly with sticker,Lagoon	1		●					
	858068	Air Filter Box Assembly with sticker,Squadron Blue	1		●					
	873114	Air Filter Box Assembly with sticker, Desert stom	1			●				
	825590	Air Filter Box Assembly with sticker,Olive green	1				●			
	866252	Air Filter Box Assembly with sticker, Chrome Black	1					●		
	806130	Air Filter Box Assembly with sticker, Chrome Graphite	1					●		
	880061	Air Filter Box Assembly with sticker, Chrome Green	1					●		
2	581007/a	Air filter element 500cc	1	●	●	●	●	●		
3	581008/a	Cover Filter element	1	●	●	●	●	●		
4	586004/a	Hex Nylock Nut M8X9.5	1	●	●	●	●	●		
5	146375	Hex Screw M6 X 14	2	●	●	●	●	●		
6	586031/a	Lock Washer M6	3	●	●	●	●	●		
7	586032/a	Plain Washer M6	1	●	●	●	●	●		
8	586035/a	Plain Washer M6	1	●	●	●	●	●		
9	586021/a	Hex Nut M6 X 1 X 7	1	●	●	●	●	●		
10	591702/a	Hex.Bolt M6 X 1 X 12	1	●	●	●	●	●		
11	591671/C	Inlet Bellow	1	●	●	●	●	●		
12	591493/A	Clip Hose - Inlet Bellow	1	●	●	●	●	●		
13	500632	Hexagon Socket Head Cap screw - M5X.8X20	2	●	●	●	●	●		

02 - 10 FILTER BOX ASSEMBLY - BULLET EFI & CLASSIC MODELS

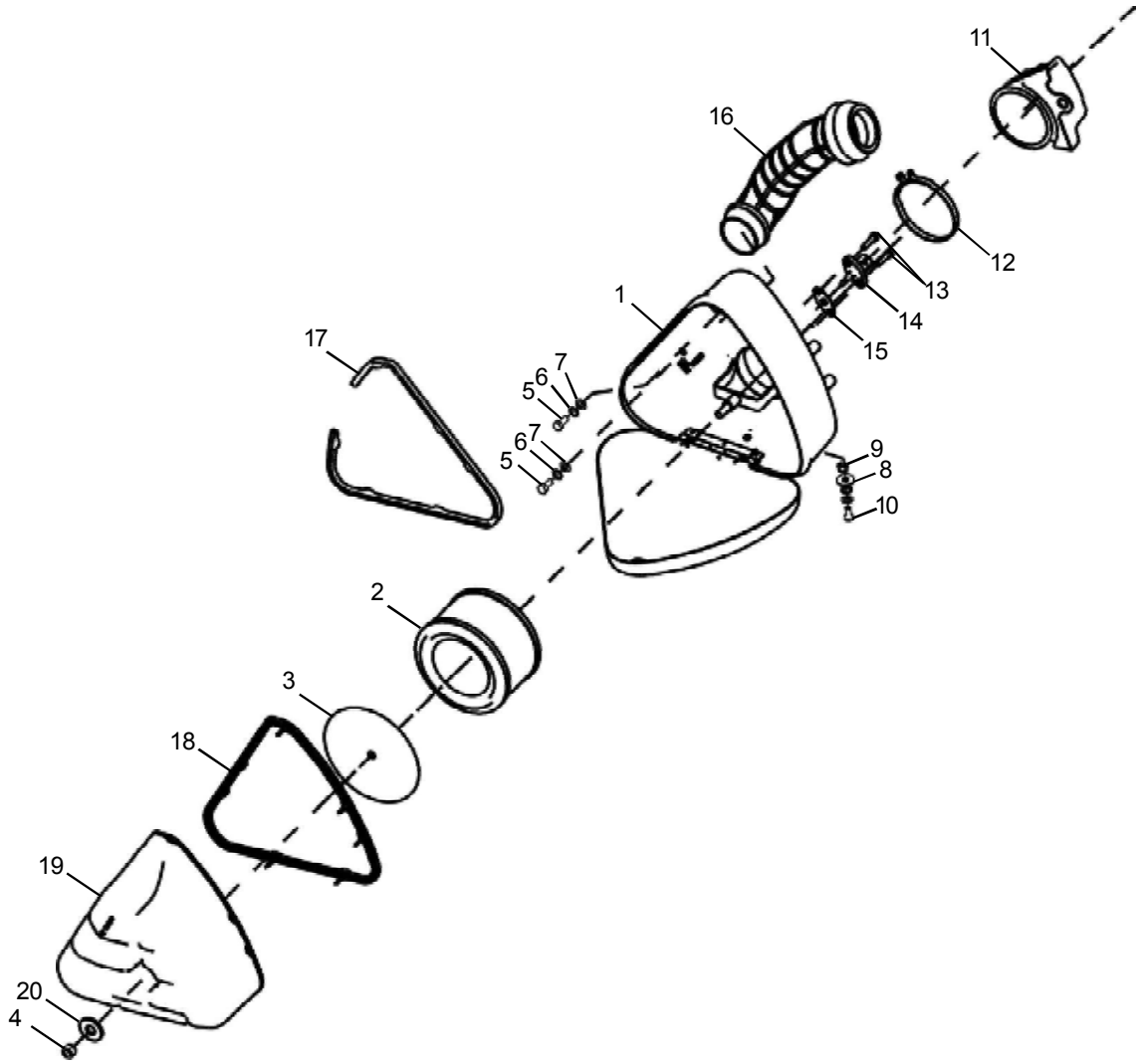

02 - 10 FILTER BOX ASSEMBLY - BULLET EFI & CLASSIC MODELS

Key No.	Part Number	Description	Qty	Bullet EFI	Classic				Conti GT	Remarks
					500	DS	BG	Chrome		
14	587384/a	TA Sensor	1	●	●	●	●	●		
15	571304/a	Gasket - Air Temp Sensor	1	●	●	●	●	●		
16	591470/a	Rubber Tube - Air Filter	1	●	●	●	●	●		
17	142391/1	Beading Box Cover	1	●	●	●	●	●		
18	591976/a	Beading Cover Air Filter	1	●	●	●	●	●		
19	591681/c	Cover Assembly - Air (Plastic)	1	●	●	●	●	●		
20	586037/a	Washer - Cover M10	1	●	●	●	●	●		

02 - 15 AIRFILTER ASSEMBLY - CONTINENTAL GT

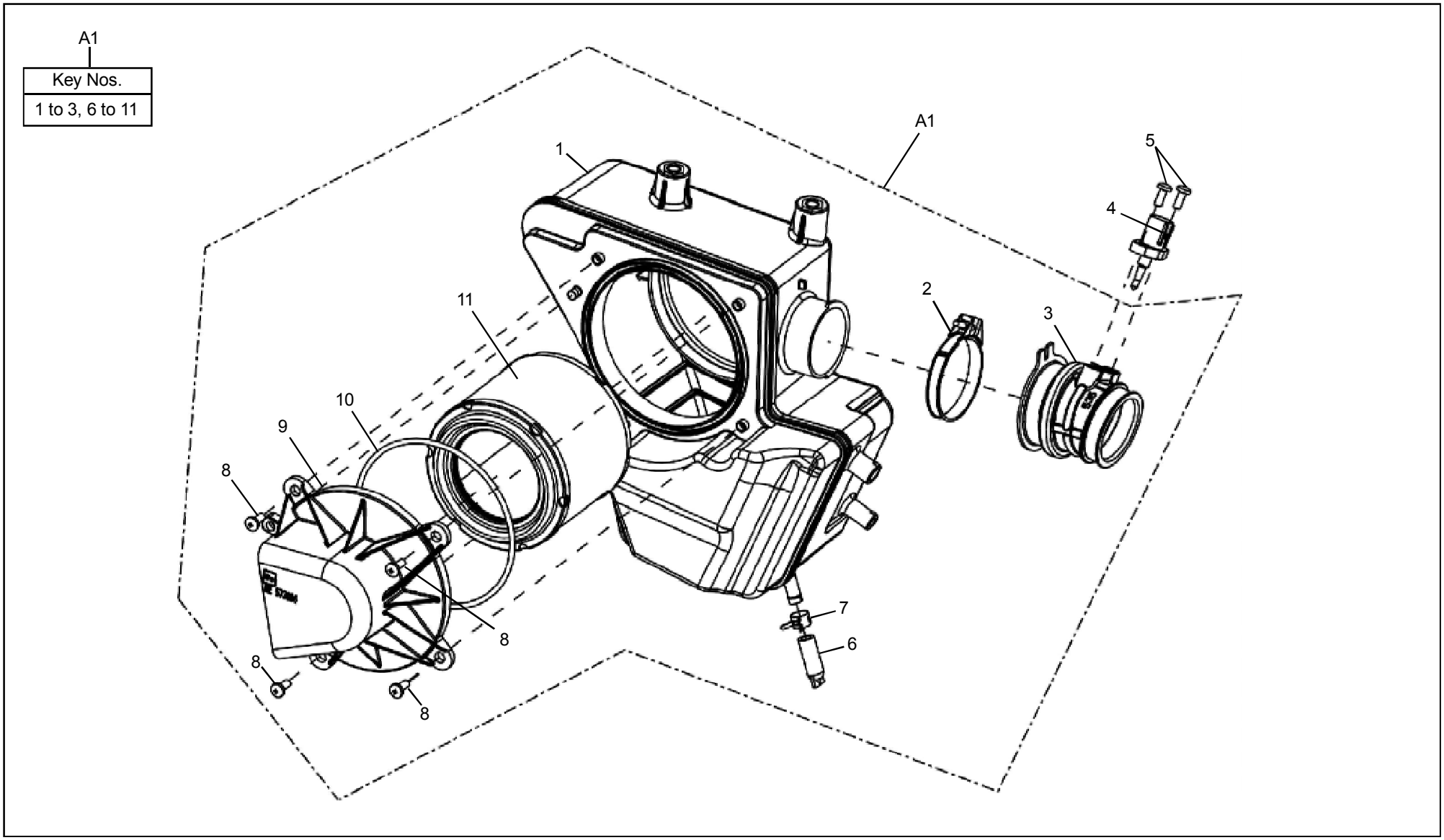

02 - 15 AIRFILTER ASSEMBLY - CONTINENTAL GT

Key No.	Part Number	Description	Qty	Bullet EFI	Classic				Conti GT	Remarks
					500	DS	BG	Chro me		
A1	1010145/a	Air fitler Assembly Complete	1						●	
1	573161/a	Air Filter Box	1						●	
2	573141/a	Clamp	1						●	
3	573205/a	Pipe Outlet	1						●	
4	587384/a	TA Sensor	1						●	
5	570013/a	Hex Socket Head Cap Screw M5 X 16	2						●	
6	573142/a	Drain Pipe	1						●	
7	573143/a	Clip	1						●	
8	573135/a	Pan Head Screw M5 X 12	4						●	
9	573136/a	Inlet Cover	1						●	
10	573138/a	Seal	1						●	
11	573139/b	Element Air Filter	1						●	

03 - 10 SOLENOID & REED VALVE ASSEMBLY

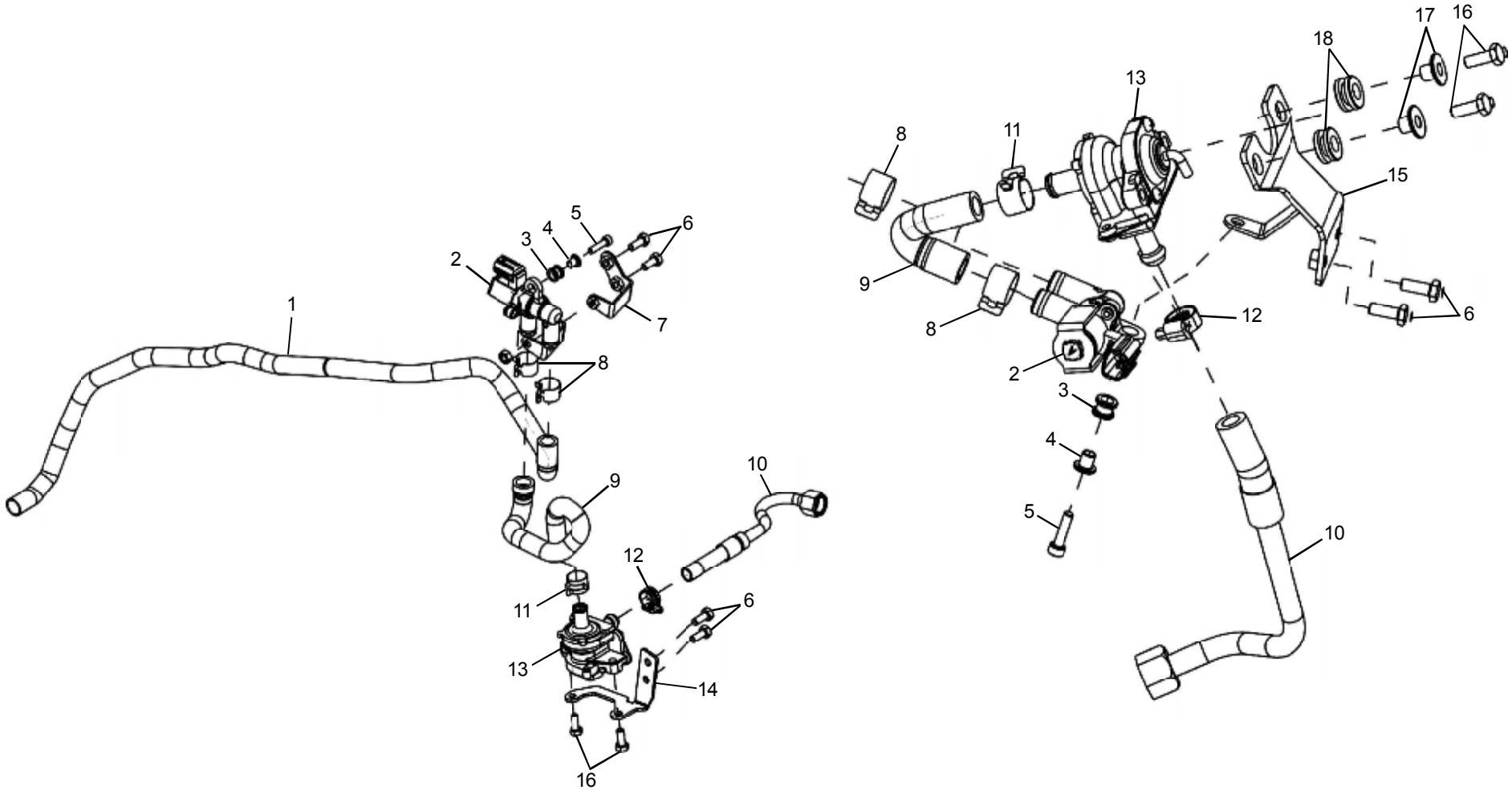

03 - 10 SOLENOID & REED VALVE ASSEMBLY

Key No.	Part Number	Description	Qty	Bullet EFI	Classic				Conti GT	Remarks
					500	DS	BG	Chrome		
1	1010024/a	Hose(Air Filter To Solenoid)	1	●	●	●	●	●		
	1010140/a	Hose(Air Filter To Solenoid)	1						●	
2	587385/a	Exai Solenoid Assy	1	●	●	●	●	●	●	
3	1010124/a	Grommet_Solenoid	1	●	●	●	●	●	●	
4	1010125/a	Spacer_Solenoid	1	●	●	●	●	●	●	
5	500632/a	Screw Soc. Head Cap-M5X20L	1	●	●	●	●	●	●	
6	142274/a	Hex Screw M6X1 X 16	4	●	●	●	●	●		
	142274/a	Hex Screw M6X1 X 16	2						●	
7	1010096/a	Bracket Assy Solenoid / PAV Mounting	1	●	●	●	●	●		
8	576110/a	Clip	2	●	●	●	●	●	●	
9	1010083/a	Hose(Solenoid To Pav)	1	●	●	●	●	●		
	1010130/a	Hose(Solenoid To Pav)	1						●	
10	582526/a	Braided Hose Assy	1	●	●	●	●	●		
	573152/a	Braided Hose Assy	1						●	
11	573964/a	Clip	1	●	●	●	●	●	●	
12	146318/a	SS Hose Clip	1	●	●	●	●	●	●	
13	1020008/a	Reed Valve Assembly	1	●	●	●	●	●		
	1020030/a	Reed Valve Assembly	1						●	
14	582528/a	Brkt Plate - Pav Mounting	1	●	●	●	●	●		
15	1010009/a	Bracket Assy Solenoid / PAV Mounting	1						●	
16	591578/a	Hex Screw M6X1 X 16	2	●	●	●	●	●	●	
17	573977/a	Bush PAV	2						●	
18	147502/a	Grommet	2						●	

04 - 10 EXHAUST PIPE & SILENCER

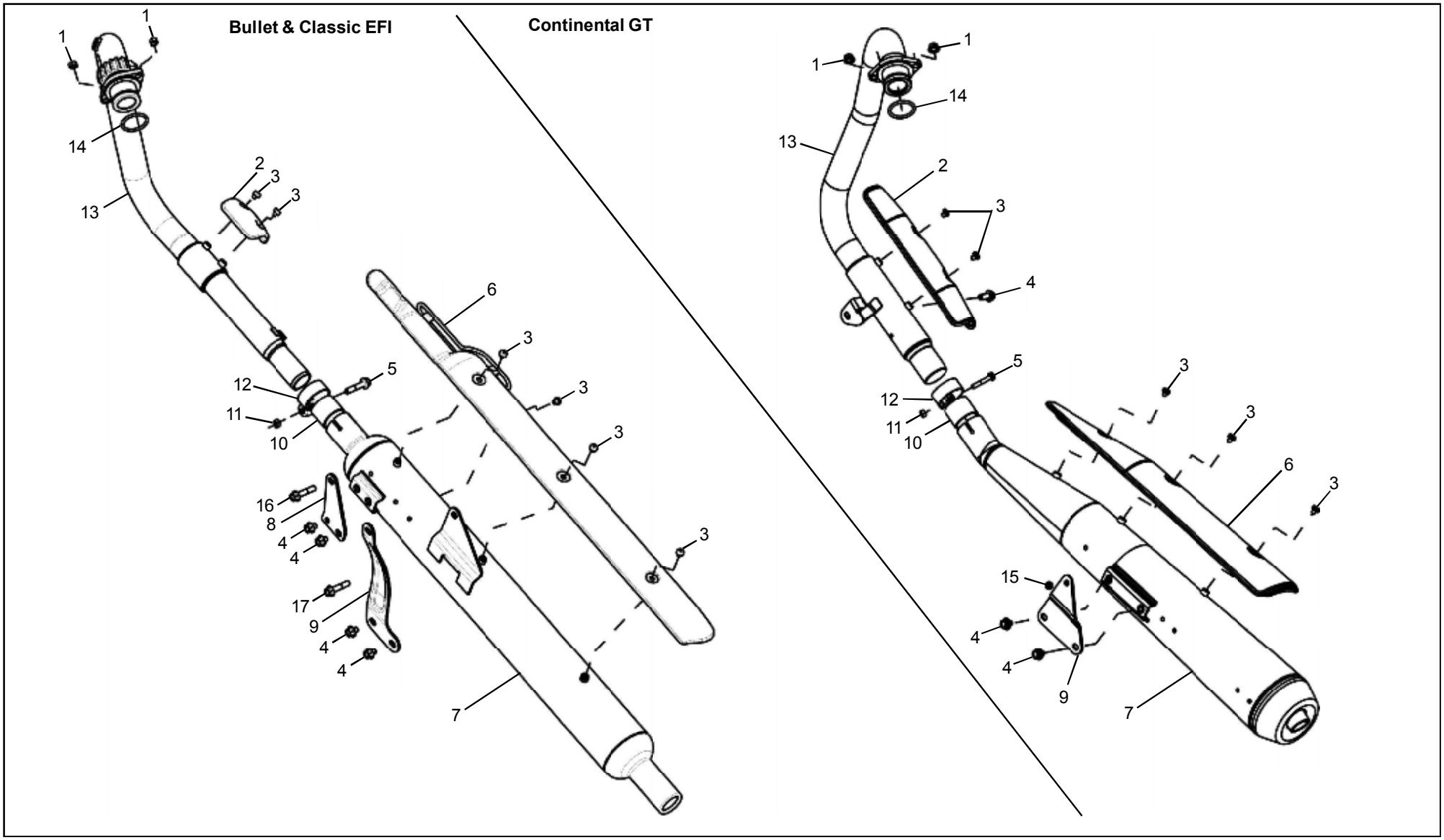

04 - 10 EXHAUST PIPE & SILENCER

Key No.	Part Number	Description	Qty	Bullet EFI	Classic				Conti GT	Remarks
					500	DS	BG	Chrome		
1	593008/b	Flanged Hex. Nut M8 X 1.25	2	●	●	●	●	●	●	
2	572075/a	Exhaust Pipe -Guard	1	●	●	●	●	●		
	573127/b	Exhaust Pipe -Guard	1						●	
3	147896/a	Philips Pan Head Screw M6 X 6	5	●	●	●	●	●	●	
4	586014/a	Flanged Hex. Bolt M8 X 20	4	●						
	586014/a	Flanged Hex. Bolt M8 X 20	2		●	●	●	●		
	586014/a	Flanged Hex. Bolt M8 X 20	3						●	
5	591578/a	Flanged Hex. Bolt M6 X 35	1	●	●	●	●	●	●	
6	581733/b	Combined Heat Shield/Silencer Guard	1	●	●	●	●	●		
	573106/b	Combined Heat Shield/Silencer Guard	1						●	
7	576131/b	Silencer CAT Assy.	1	●						
	571292/b	Silencer CAT Assy.	1		●	●	●	●		
	573193/a	Silencer CAT Assy.	1						●	
8	591865/a	Bracket front silencer	1	●	●	●	●	●		
9	592509/a	Bracket -Silencer Mounting /Bracket Silencer	1	●						
	573110/b	Bracket -Silencer Mounting /Bracket Silencer	1						●	
10	573211/a	Gasket - Exhaust pipe & Silencer	1	●	●	●	●	●	●	
11	141060	Hex. Nut M6	1	●	●	●	●	●	●	
12	585538/c	Clamp -Silencer	1	●	●	●	●	●	●	
13	572066/b	Exhaust Pipe Assy.	1	●	●	●	●	●		
	573208/b	Exhaust Pipe Assy.	1						●	
14	582638/a	Exhaust Gasket (Copper)	1	●	●	●	●	●	●	
15	586004/a	Hex. Nut with Nylon Insert, M8	1						●	
16	582591/a	Flange Hex. Bolt M10 X 1.5 X 35	1	●	●	●	●	●		

04 - 10 EXHAUST PIPE & SILENCER

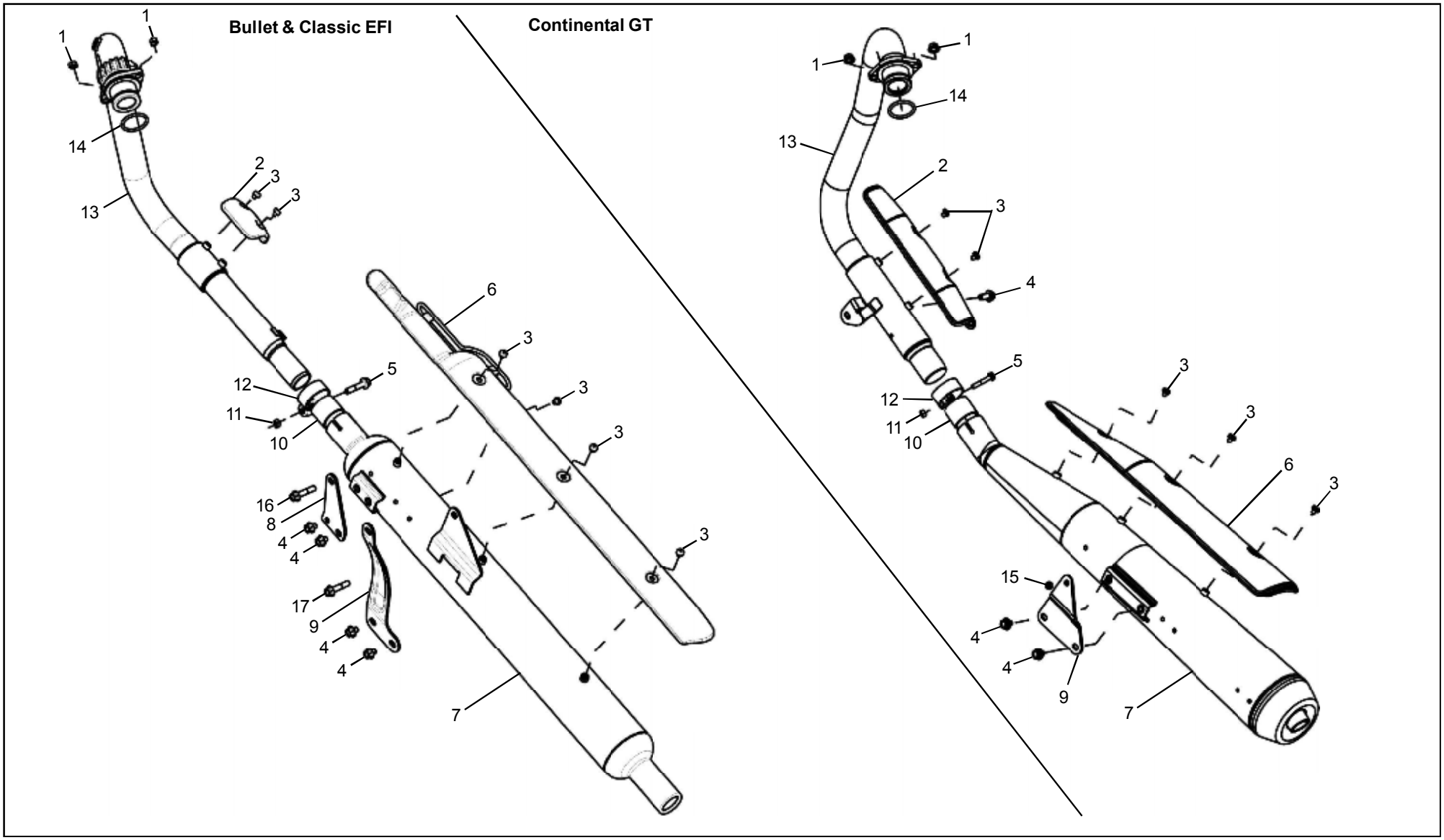

04 - 10 EXHAUST PIPE & SILENCER

Key No.	Part Number	Description	Qty	Bullet EFI	Classic				Conti GT	Remarks
					500	DS	BG	Chrome		
17	142258	Hex. Screw M8 X 16	1	●						

05 - 10 FUEL TANK - BULLET EFI & CLASSIC MODELS

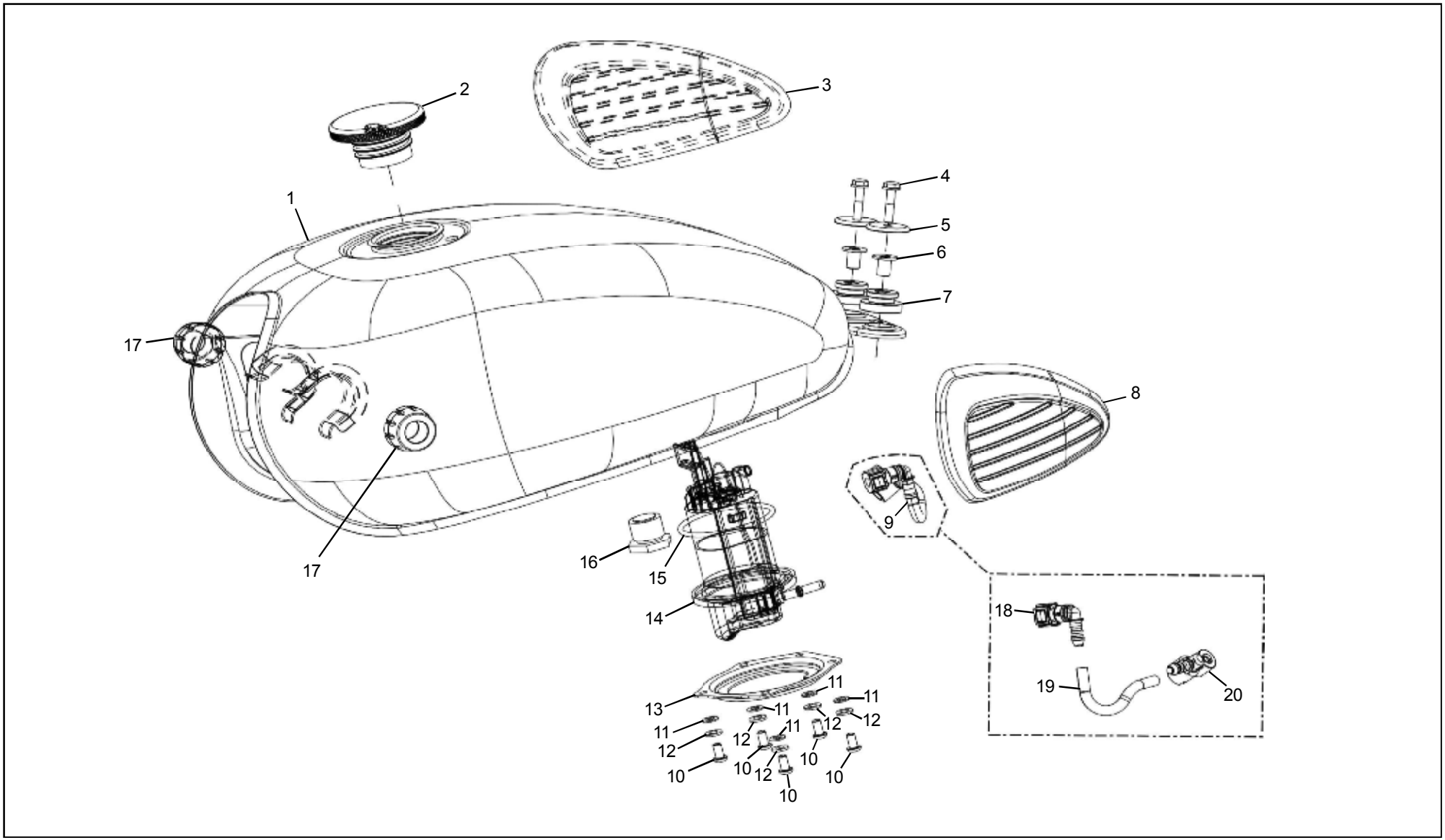

05 - 10 FUEL TANK - BULLET EFI & CLASSIC MODELS

Key No.	Part Number	Description	Qty	Bullet EFI	Classic				Conti GT	Remarks
					500	DS	BG	Chrome		
1	866262	Fuel Tank With Sticker - Black	1	●						
	880070	Fuel Tank With Sticker - Forest Green	1	●						
	806136	Fuel Tank With Sticker - Marsh Grey	1	●						
	866246	Fuel Tank With Sticker -Classic Black	1		●					
	858067	Fuel Tank With Sticker -Squadron Blue	1		●					
	881040	Fuel Tank With Sticker -Classic Tan	1		●					
	818035	Fuel Tank With Sticker -Classic Lagoon	1		●					
	873113	Fuel Tank With Sticker -Desert Storm	1			●				
	825589	Fuel Tank With Sticker -Olive Green	1				●			
	866251	Fuel Tank With Sticker -Chrome Black	1					●		
	806129	Fuel Tank With Sticker -Chrome Graphite	1					●		
	880060	Fuel Tank With Sticker -Chrome Green	1					●		
2	591998/c	Cap-Fuel Tank	1	●	●	●	●	●		
3	591058/e	Thigh Pad R H	1		●	●	●	●		
4	591577/b	Flanged Hex Bolt M6X1X27	2	●	●	●	●	●		
5	594538/a	Washer-Tank	2	●	●	●	●	●		
6	581690/a	Sleeve-Tank Mtg Rear	2	●	●	●	●	●		
7	594264/b	Rear Damper-Tank	2	●	●	●	●	●		
8	591059/e	Thigh Pad L H	1		●	●	●	●		
9	1020019/a	PA Tube Assembly	1	●	●	●	●	●		
10	587649/a	Hex Socket Button Head Cap Screw M6 X 12	5	●	●	●	●	●		
11	144636/a	Washer	5	●	●	●	●	●		
12	143496/a	Washer	5	●	●	●	●	●		
13	1010098/b	Clamp Plate - Fuel Pump	1	●	●	●	●	●		

05 - 10 FUEL TANK - BULLET EFI & CLASSIC MODELS

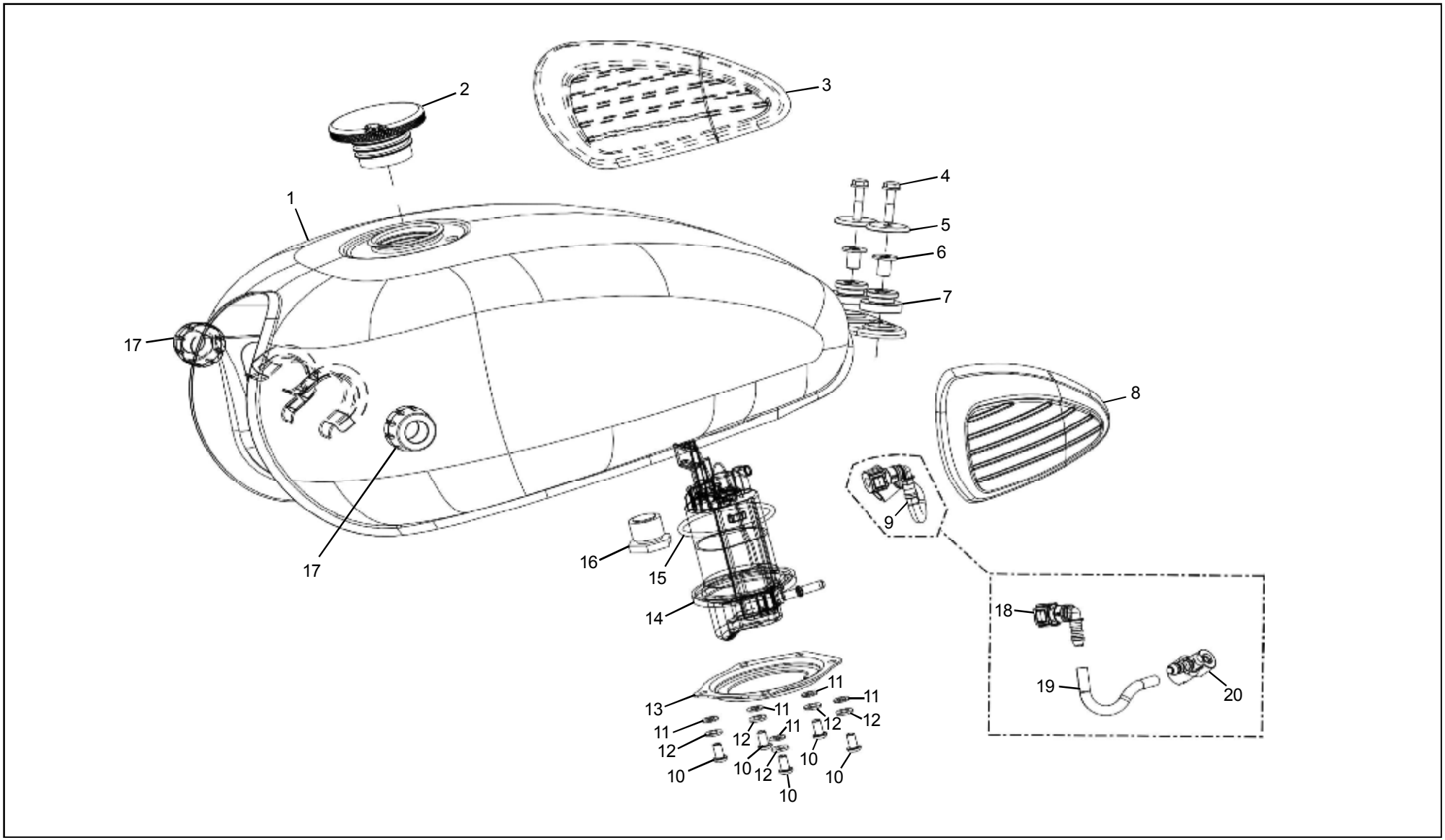

05 - 10 FUEL TANK - BULLET EFI & CLASSIC MODELS

Key No.	Part Number	Description	Qty	Bullet EFI	Classic				Conti GT	Remarks
					500	DS	BG	Chrome		
14	587377/a	Fuel Pump	1	●	●	●	●	●		
15	1010088/a	O Ring	1	●	●	●	●	●		
16	581053/d	Low Fuel Sensor	1	●	●	●	●	●		
17	594268/b	Front Damper-Tank	2	●	●	●	●	●		
18	1020017/a	Quick Connector	1	●	●	●	●	●		
19	1020018/a	Fuel Hose (Pa Tube)	1	●	●	●	●	●		
20	1020016/a	Cap,Injector	1	●	●	●	●	●		

05 - 15 FUEL TANK - CONTINENTAL GT

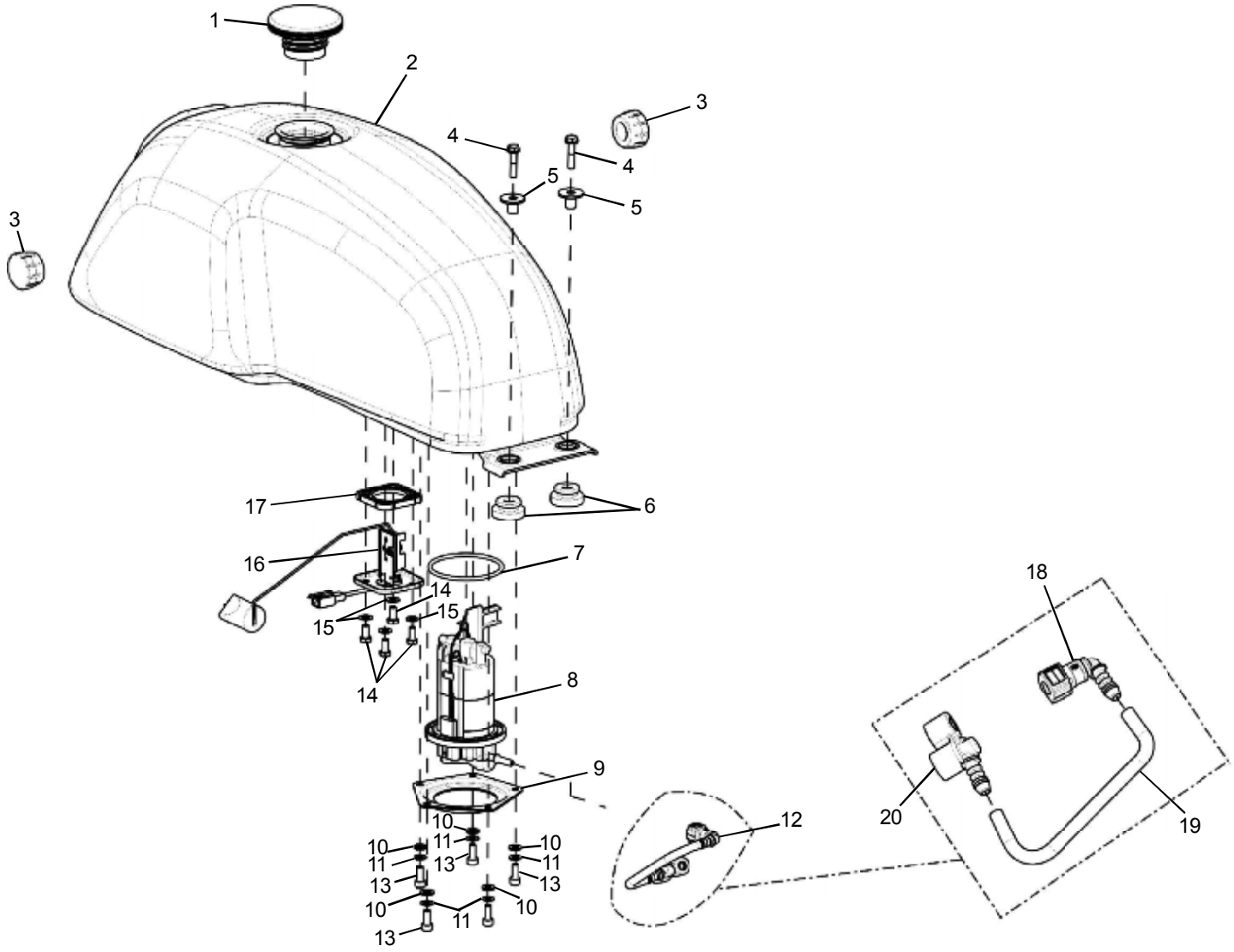

05 - 15 FUEL TANK - CONTINENTAL GT

Key No.	Part Number	Description	Qty	Bullet EFI	Classic				Conti GT	Remarks
					500	DS	BG	Chrome		
1	591998/c	Cap-Fuel Tank	1						●	
2	877016	Fuel Tank Assy With Sticker (Red)	1						●	
	851034	Fuel Tank Assy With Sticker (Green)	1						●	
	866253	Fuel Tank Assy With Sticker (Black)	1						●	
3	594268/b	Front Damper-Tank	2						●	
4	591577/b	Flanged Hex Bolt M6 X 1 X 27	2						●	
5	585659/a	Bush - Fuel Tank	2						●	
6	594264/b	Rear Damper-Tank	2						●	
7	1010088/a	O Ring	1						●	
8	587377/a	Fuel Pump	1						●	
9	1010100/b	Clamp Plate - Fuel Pump	1						●	
10	143496/a	Washer	5						●	
11	144636/a	Washer	5						●	
12	1020021/a	Fuel Hose Assembly	1						●	
13	500355/a	Hex Socket Head Cap Screw M6 X 16	5						●	
14	585061/a	Hex Screw M6 X 12	4						●	
15	141061/2	Punched Washer-Fuel Gauge Mtg	4						●	
16	585465/c	Fuel Gauge Unit	1						●	
17	585456/a	O' Ring-Fuel Gauge	1						●	
18	1020017/a	Quick Connector	1						●	
19	1020020	Fuel Hose (PA Tube)	1						●	
20	1020016/a	Cap, Injector	1						●	

06-10 EVAPORATIVE EMISSIONS - BULLET EFI & CLASSIC MODELS

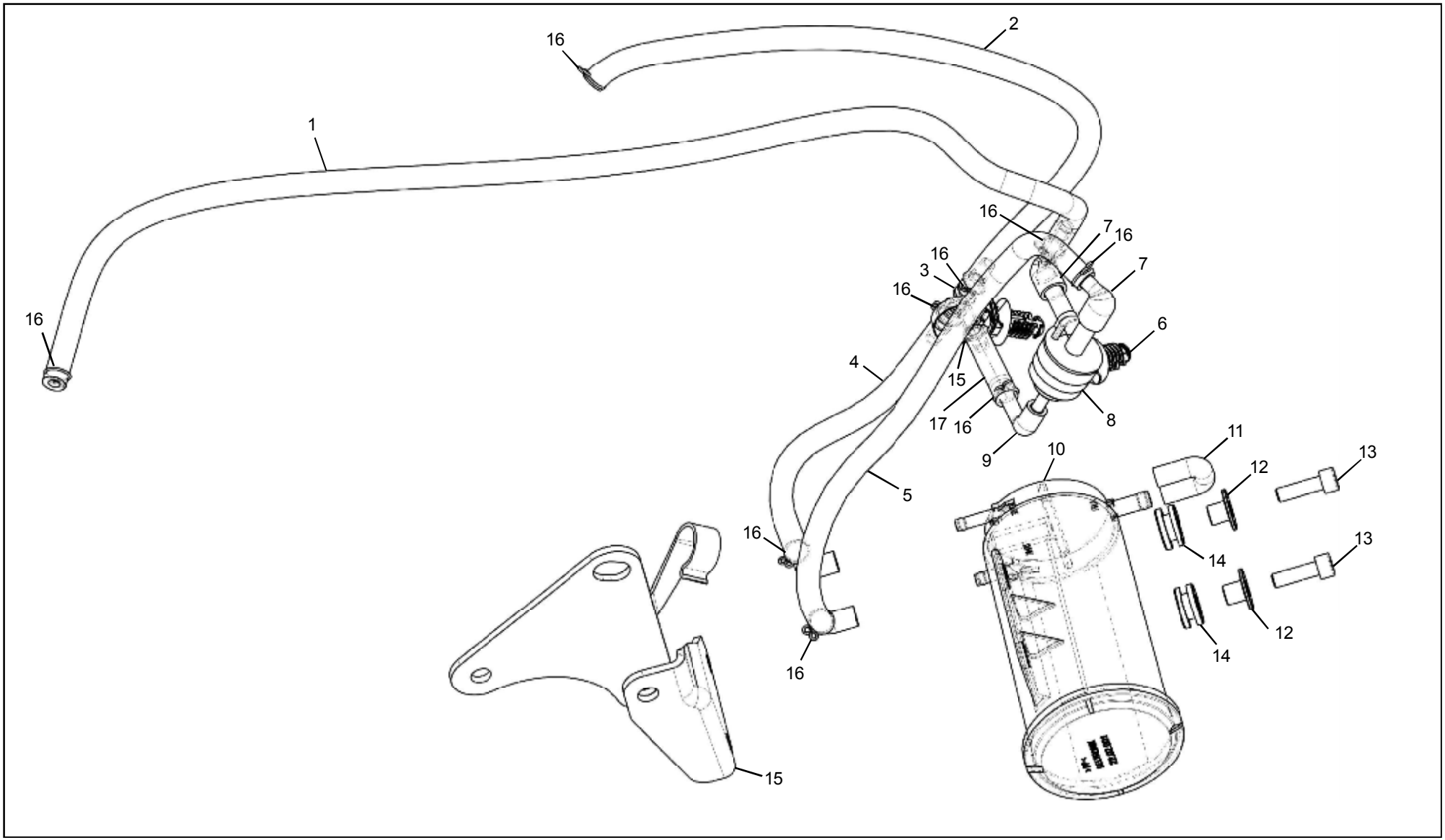

06-10 EVAPORATIVE EMISSIONS - BULLET EFI & CLASSIC MODELS

Key No.	Part Number	Description	Qty	Bullet EFI	Classic				Conti GT	Remarks
					500	DS	BG	Chrome		
1	1010169/a	Hose Purge Valve To Tank	1	●	●	●	●	●		
2	1010171/a	Hose T Connector To Throttle Body	1	●	●	●	●	●		
3	591634/a	T Connector	1	●	●	●	●	●		
4	1010172/a	Hose T Connector To Canister	1	●	●	●	●	●		
5	1010170/a	Hose Purge To Canister	1	●	●	●	●	●		
6	1010175/a	Cable Clip Evap	2	●	●	●	●	●		
7	591700/b	Adaptor Purge Valve LH	2	●	●	●	●	●		
8	591999/a	Purge Valve	1	●	●	●	●	●		
9	591701/b	Adaptor Purge Valve RH	1	●	●	●	●	●		
10	1010050/a	Canister	1	●	●	●	●	●		
11	591643/a	Hose Canister Vent	1	●	●	●	●	●		
12	585395/a	Bush Pav	2	●	●	●	●	●		
13	570030/a	Hex.Socket Hd.Cap Screw,M6 X 20	2	●	●	●	●	●		
14	585394/a	Grommet	2	●	●	●	●	●		
15	1010048/c	Bracket Assy Canister Mtg	1	●	●	●	●	●		
16	147701/a	Wire Clip	11	●	●	●	●	●		
17	1010168/a	Hose T Connector To Purge Valve	1	●	●	●	●	●		

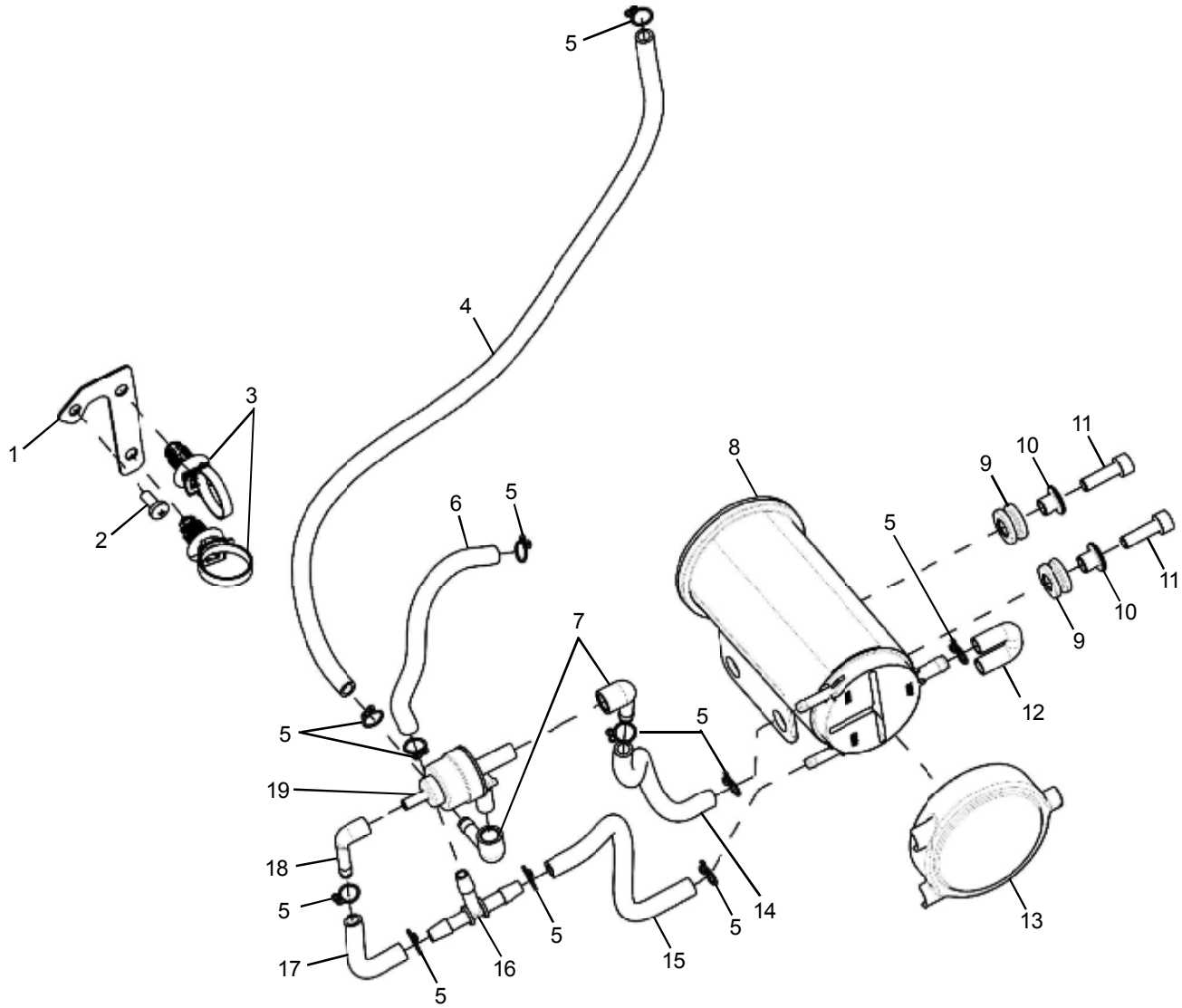
5
4
3
1
2
6
5
8
9
10
11
5
11
10
9
7
12
5
5
19
18
5
14
5
5
13
17
16
15
5

06 - 15 EVAPORATIVE EMISSIONS - CONTINENTAL GT

Key No.	Part Number	Description	Qty	Bullet EFI	Classic				Conti GT	Remarks
					500	DS	BG	Chro me		
1	1010177/b	Bracket-Purge Valve	1						●	
2	573135/b	Pan Head Screw M5 X 12	1						●	
3	1010175/a	Cable Clip Evap	2						●	
4	1010164/a	Hose-Purge Valve To Tank(GT)	1						●	
5	1010184/a	Clip- Evap Hoses	10						●	
6	1010166/a	Hose-T-Connector To Throttle(GT)	1						●	
7	591700/b	Adaptor Purge Valve LH	2						●	
8	1010050/a	Canister Assy	1						●	
9	585394/b	Grommet	2						●	
10	585395/b	Sleeve	2						●	
11	570030	Hex.Socket Hd.Cap Screw,M6 X 20	2						●	
12	591643/a	Hose Canister Vent	1						●	
13	1010162/a	Canister Cover	1						●	
14	1010165/a	Hose- Purge Valve To Canister(GT)	1						●	
15	1010167/a	Hose T-Connector To Canister(GT)	1						●	
16	591634/a	T – Connector	1						●	
17	1010163/a	Hose -Purge Valve To T-Connector(GT)	1						●	
18	591701/b	Adaptor Purge Valve RH	1						●	
19	591999/a	Purge Valve	1						●	

07 - 10 SEAT ASSEMBLY - BULLET EFI MODELS

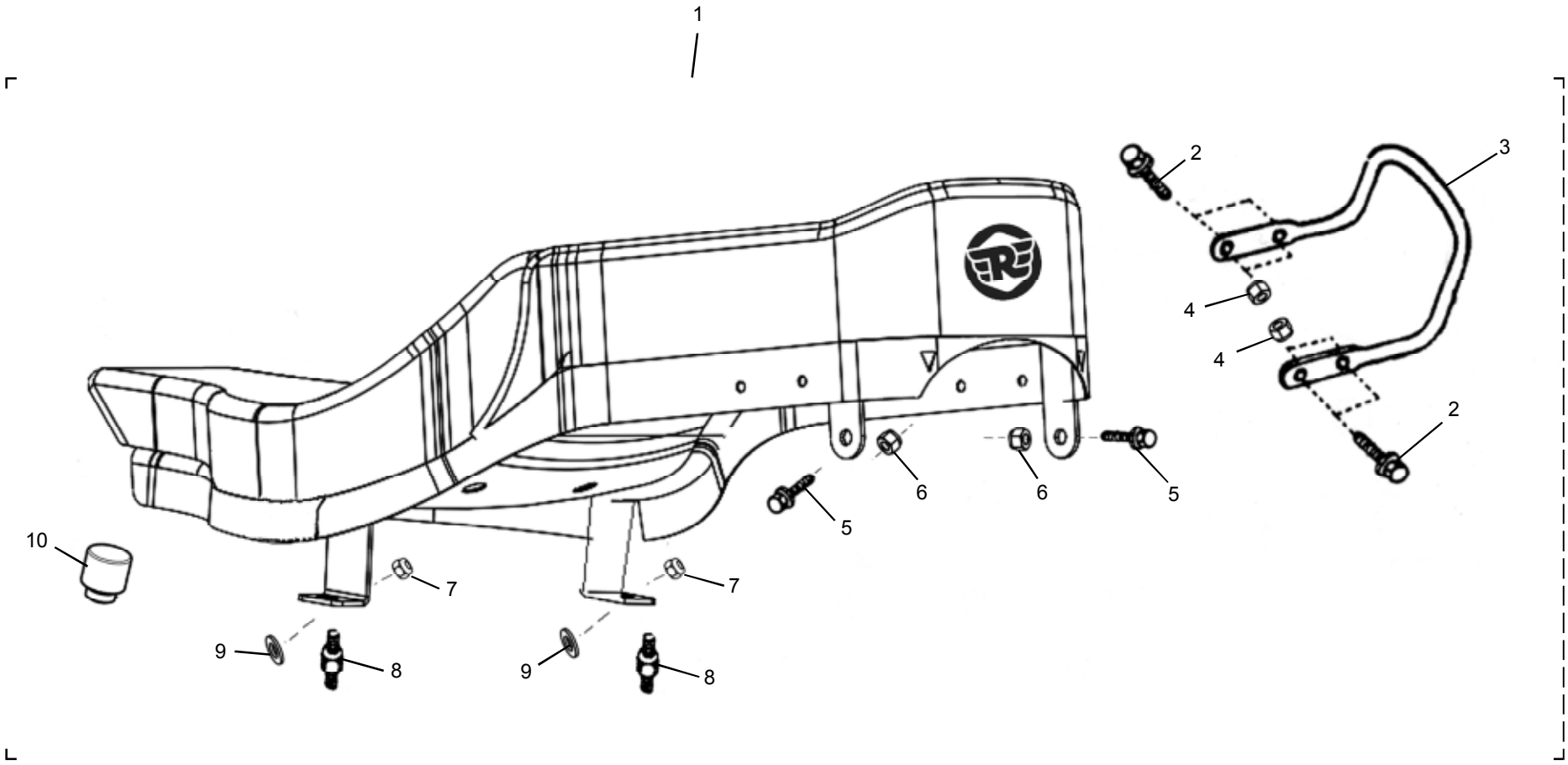

07 - 10 SEAT ASSEMBLY - BULLET EFI MODELS

Key No.	Part Number	Description	Qty	Bullet EFI	Classic				Conti GT	Remarks
					500	DS	BG	Chrome		
1	582784/a	Complete Seat Assy	1	●						
2	145861/a	Flanged Hex. Bolt M 6 X 20	4	●						
3	141654/1	Pillion Handle	1	●						
4	570702/a	Hex Nut With Nylon Insert, M6	4	●						
5	586002/a	Flanged Hex. Bolt M8 X 20	2	●						
6	586004/a	Hex Nut With Nylon Insert, M8	2	●						
7	586005/a	Flanged Hex Nut M8 X 7.7 X 8	2	●						
8	586055/a	Stud M8	2	●						
9	586036/a	Plain Washer M8	4	●						
10	146243/c	Rubber Support Seat Front	1	●						

07 - 15 SEAT ASSEMBLY - CLASSIC MODELS

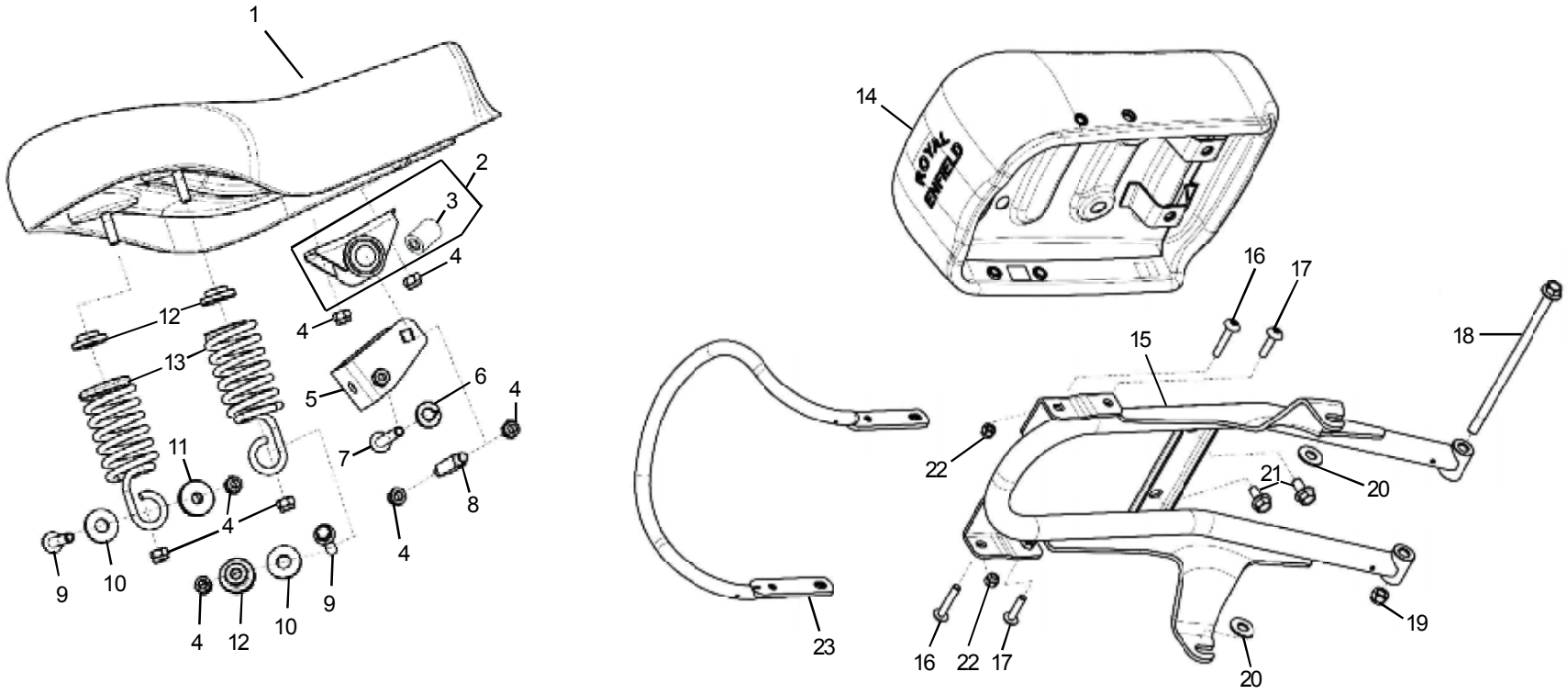

07 - 15 SEAT ASSEMBLY - CLASSIC MODELS

Key No.	Part Number	Description	Qty	Bullet EFI	Classic				Conti GT	Remarks
					500	DS	BG	Chrome		
1	591066/f	Split Seat Rider	1		●	●	●			
	593031/e	Split Seat Rider (chrome Models)	1					●		Only for Chrome Models
2	591423/a	Silent Block Bracket Assy	1		●	●	●	●		
3	591421/a	Silent Block Seat	1		●	●	●	●		
4	586004/a	Hex. Nut with Nylock insert, M8 X 9.5	8		●	●	●	●		
5	591418/b	Seat Hinge Mounting Assembly	1		●	●	●	●		
6	586038/a	Spring Washer M8	4		●	●	●			
	593056/a	Spring Washer M8 - Special	4					●		Only for Chrome Models
7	586024/a	Flanged Hex. Bolt M8 X 60	1		●	●	●	●		
8	591415/a	Stud - Seat Mounting	1		●	●	●	●		
9	586022/a	Hexagonal Bolt M8 X 45	2		●	●	●			
	593033/a	Domed Cap Bolt M8 X 45 (chrome)	2					●		Only for Chrome Models
10	591608/a	Washer (Classic Models)	2		●	●	●			
	586036/a	Plain Washer (Chrome)	2					●		Only for Chrome Models
11	540042/c	Spring Bush	2		●	●	●	●		
12	583951/a	Bush - Seat Spring	4		●	●	●	●		
13	591029/e	Spring	2		●	●	●	●		
14	591077/f	Split Seat Assy. Pillion	1		●	●	●			
	593130/d	Split Seat Assy-Pillion Chrome	1					●		Only for Chrome Models
15	801575	Sub Frame - Black	1		●			●		
	858030	Sub Frame - Squadron Blue	1		●					
	873023	Sub Frame - Desert Storm	1			●				
	825406	Sub Frame - Battle Green	1				●			
16	591578/a	Flanged Hex Bolt M6 X 1 X 35	2		●	●	●	●		

07 - 15 SEAT ASSEMBLY - CLASSIC MODELS

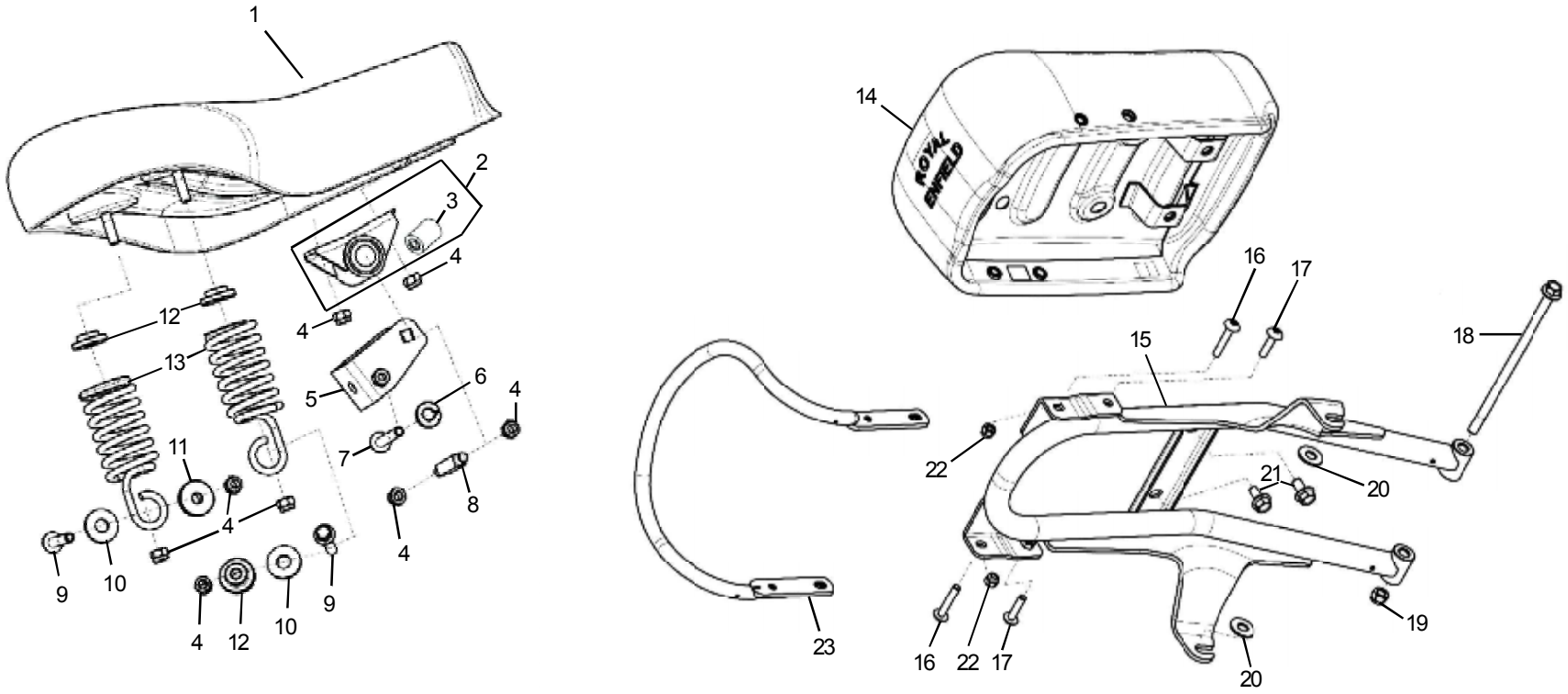

07 - 15 SEAT ASSEMBLY - CLASSIC MODELS

Key No.	Part Number	Description	Qty	Bullet EFI	Classic				Conti GT	Remarks
					500	DS	BG	Chrome		
17	591577/a	Flanged Hex Bolt M6 X 1 X 27	2		●	●	●	●		
18	593029/d	Flanged Hex Bolt M8 X 170	1		●	●	●	●		
19	586004/a	Hex. Nut With Nylon Insert M8 X 9.5	1		●	●	●	●		
20	586032/a	Plain Washer	2		●	●	●			
	586038/a	Spring Washer	2					●		Only for Chrome Models
21	586025/a	Flanged Hex Bolt M8 X 1.25 X 16	2		●	●	●	●		
22	586021/a	Hexagonal Nut M6 X 1 X 7	2		●	●	●	●		
23	591197/c	Pillion Handle for Rear Seat - Black	1		●	●	●	●		

07 - 20 SEAT ASSEMBLY - CONTINENTAL GT

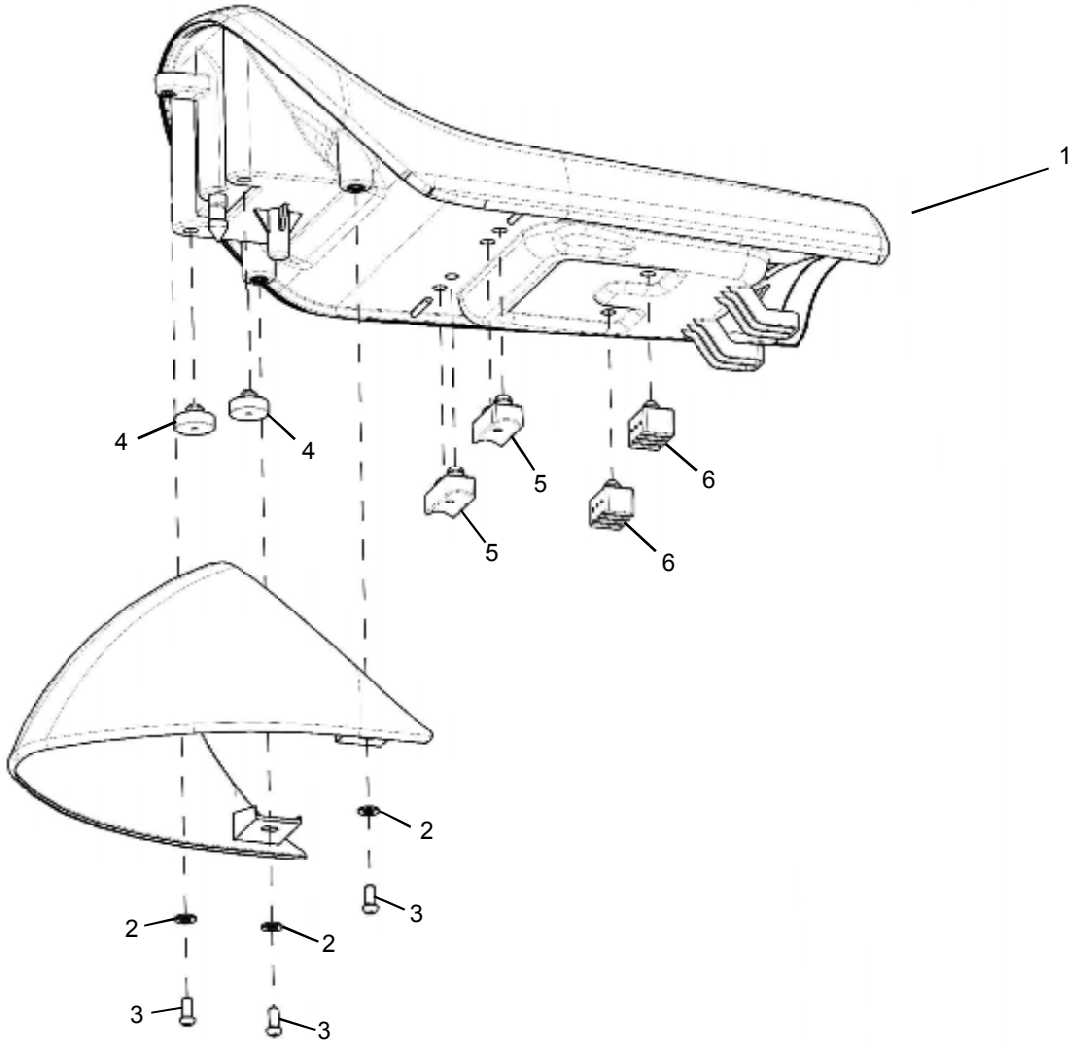

07 - 20 SEAT ASSEMBLY - CONTINENTAL GT

Key No.	Part Number	Description	Qty	Bullet EFI	Classic				Conti GT	Remarks
					500	DS	BG	Chrome		
1	585065/B	Single Seat Assembly with Cowl - Red	1						●	
	585019/A	Single Seat Assembly with Cowl - Black	1						●	
	585410/A	Single Seat Assembly with Cowl - Green	1						●	
2	141061/A	Plain Washer	3						●	
3	145882/A	Cross Recessed Pan Head Screw M6X14	3						●	
4	585066/B	Rubber Support-Rear	2						●	
5	585067/B	Rubber Support-Middle	2						●	
6	585068/B	Rubber Support-Front	2						●	

08 - 10 HANDLE BAR & CONTROLS - BULLET EFI & CLASSIC MODELS

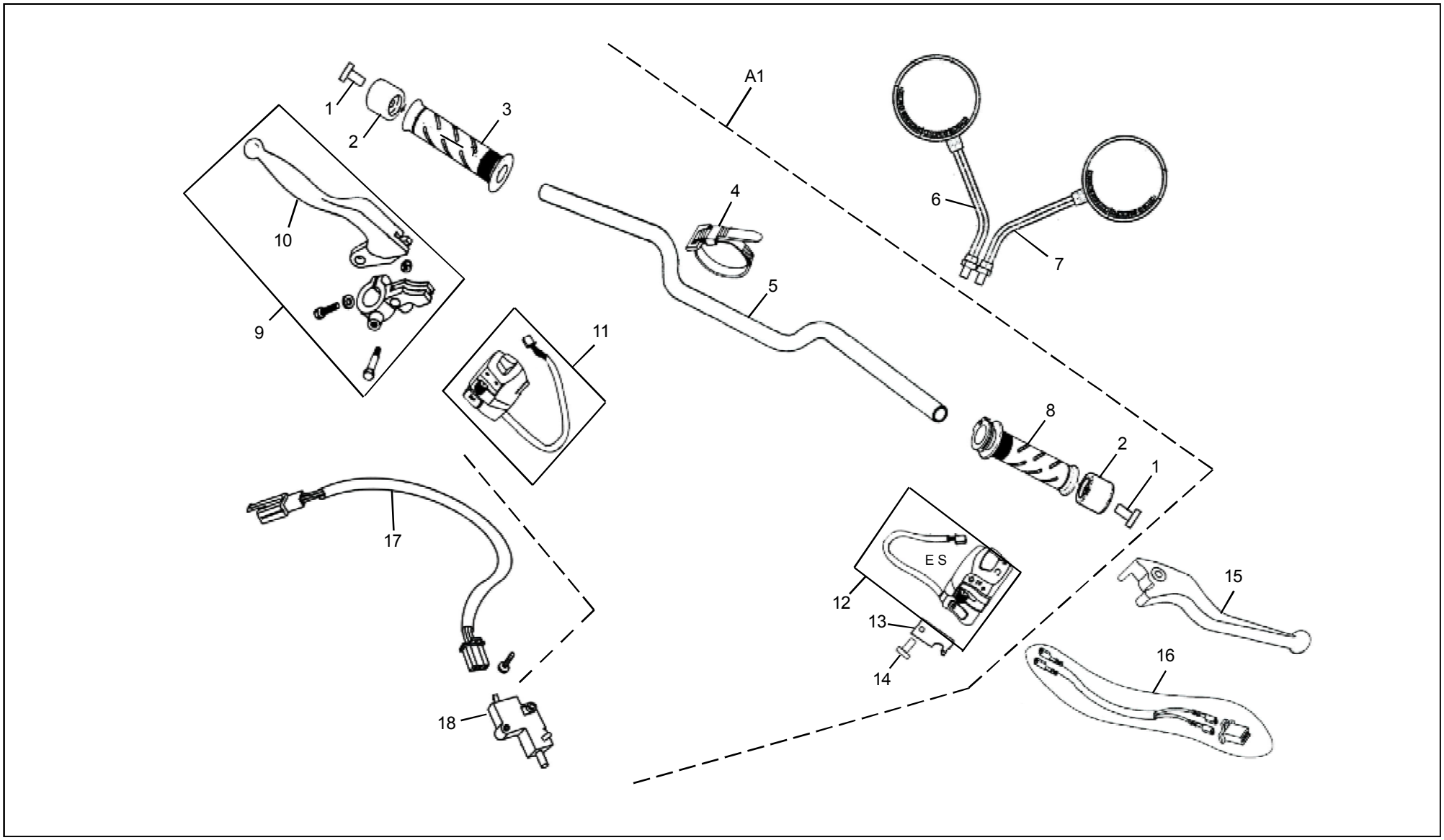

08 - 10 HANDLE BAR & CONTROLS - BULLET EFI & CLASSIC MODELS

Key No.	Part Number	Description	Qty	Bullet EFI	Classic				Conti GT	Remarks
					500	DS	BG	Chrome		
A1	590831/A	Handle Bar Assembly Complete	1	●						
	590830/A	Handle Bar Assembly Complete	1		●	●	●	●		
1	521202/a	Hex Socket Head Screw M8 X 50	2	●	●	●	●	●		
2	521201/b	Damper Weight	2	●	●	●	●	●		
3	521186/a	Hand Grip LH	1	●	●	●	●	●		
4	141161/C	Cable Strap 6"	2	●	●	●	●	●		
	141162/C	Cable Strap 8"	3	●	●	●	●	●		
5	591993/c	Handle Bar Complete	1	●	●	●	●	●		
6	590271/a	Rear View Mirror LH	1	●	●	●	●	●		
7	590272/a	Rear View Mirror RH	1	●	●	●	●	●		
8	581098/a	Grip Complete - Throttle RH	1	●	●	●	●	●		
9	581083/a	Lever & Holder Assy. LH	1	●	●	●	●	●		
10	581083/a	Clutch Lever	1	●	●	●	●	●		
11	581029/b	Switch Module LH	1	●	●	●	●	●		
12	590827/a	Switch Module RH	1	●	●	●	●	●		
13	591521/a	Rotor Plate	1	●	●	●	●	●		
14	591522/A	Pan Head Screw M5 X 10	1	●	●	●	●	●		
15	594711/a	Front Brake Lever kit	1	●	●	●	●	●		
16	592857/a	Add On Lead, Front Brake Switch	1	●	●	●	●	●		
17	147271/b	Add On Lead, Clutch Switch	1	●	●	●	●	●		
18	560632/a	Clutch Switch	1	●	●	●	●	●		

08 - 15 HANDLE BAR & CONTROLS - CONTINENTAL GT

A1

Key Nos.
1 & 2

A2

Key Nos.
24 & 25

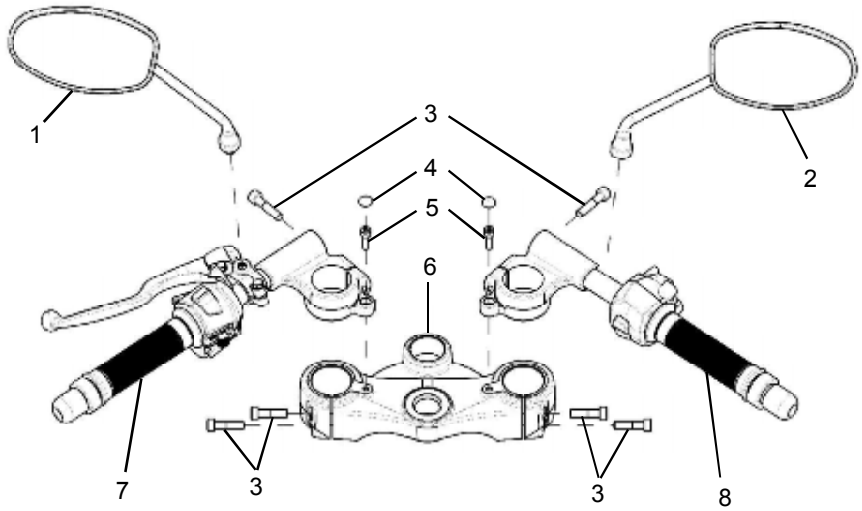

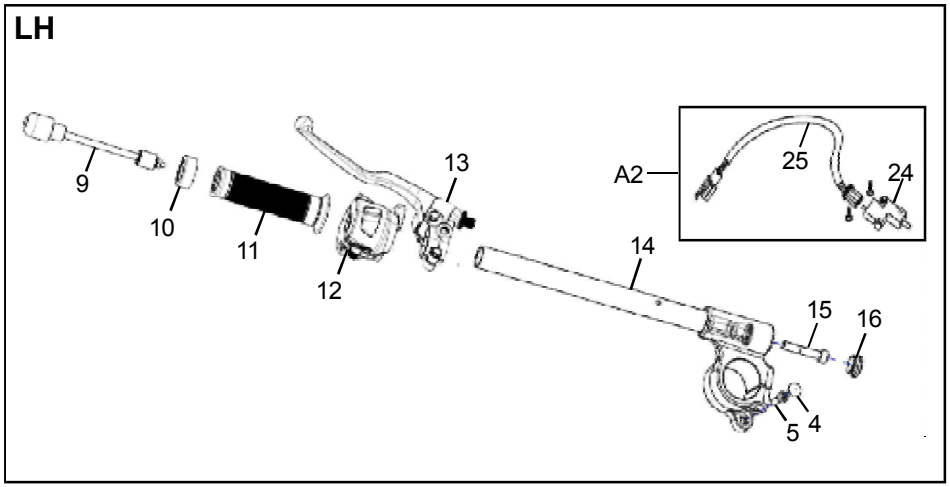

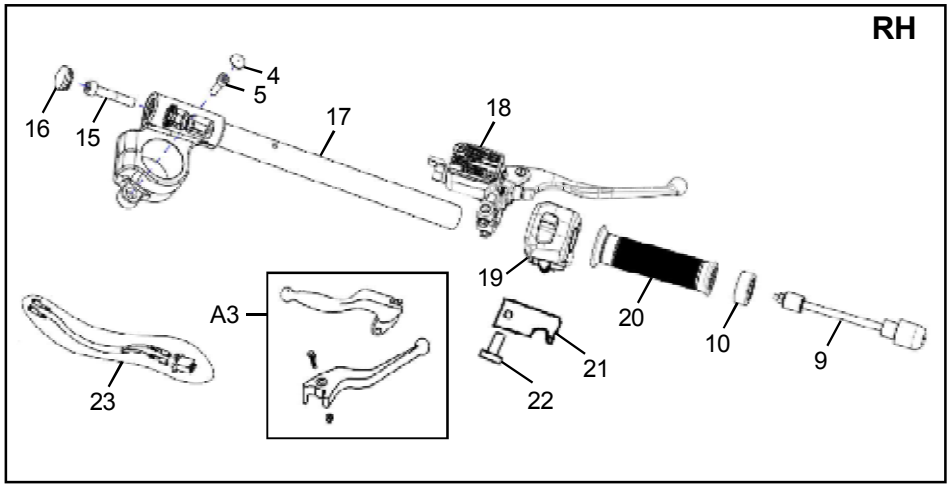

08 - 15 HANDLE BAR & CONTROLS - CONTINENTAL GT

Key No.	Part Number	Description	Qty	Bullet EFI	Classic				Conti GT	Remarks
					500	DS	BG	Chrome		
A1	888266	Mirror Set OE - Continental GT	1						●	
A2	888321	Clutch Switch Repair Kit	1						●	
A3	888128	Clutch & Front Brake Lever Kit (Clear Coated)	1						●	
1	585040/a	Rear View Mirror - LH	1						●	
2	585041/a	Rear View Mirror - RH	1						●	
3	594215/a	Hex. Socket Head Screw M8 X 35	6						●	
4	585812/a	Grommet - Clip ON	2						●	
5	570030	Hex. Socket Head Cap Screw M6 X 20	4						●	
6	585042/c	Top Yoke	1						●	
7	585029/c	Handle Bar Assy. - LH	1						●	
8	585436/a	Handle Bar Assy. - RH	1						●	
9	585603/a	Counter Weight Assy.	2						●	
10	585423/a	Mirror Dummy Ring	2						●	
11	521186/a	Handle Grip - LH	1						●	
12	581029/b	Switch Module - LH	1						●	
13	581083/a	Lever & Holder Assy. - LH	1						●	
14	585476/a	Handle Bar Complete - LH	1						●	
15	586023/a	Hex. Socket Head Bolt M8 X 40	2						●	
16	585413/a	Rubber Sleeve - Handle Bar	2						●	
17	585031/a	Handle Bar Complete - RH	1						●	
18	585027/a	Master Cylinder - Front	1						●	
19	590827/a	Switch Module - RH	1						●	
20	581098/a	Grip Complete - Throttle RH	1						●	
21	591521/a	Rotor Plate - Throttle Cable	1						●	

08 - 15 HANDLE BAR & CONTROLS - CONTINENTAL GT

A1

Key Nos.
1 & 2

A2

Key Nos.
24 & 25

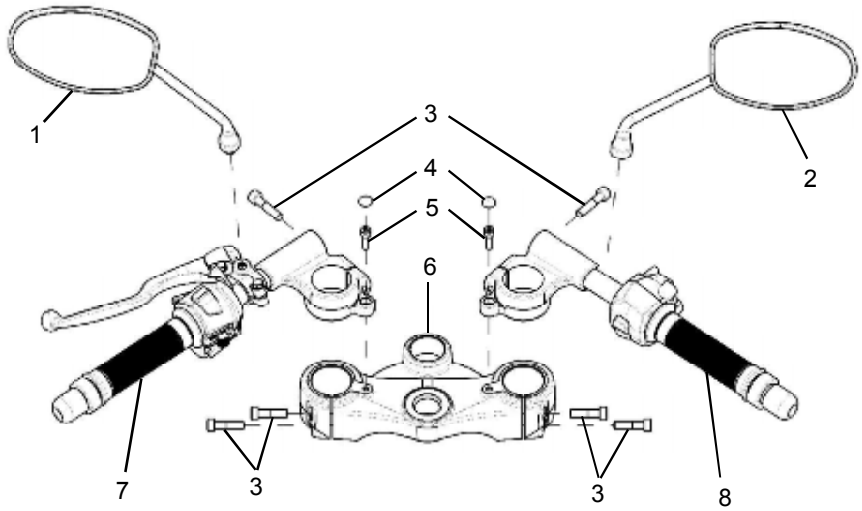

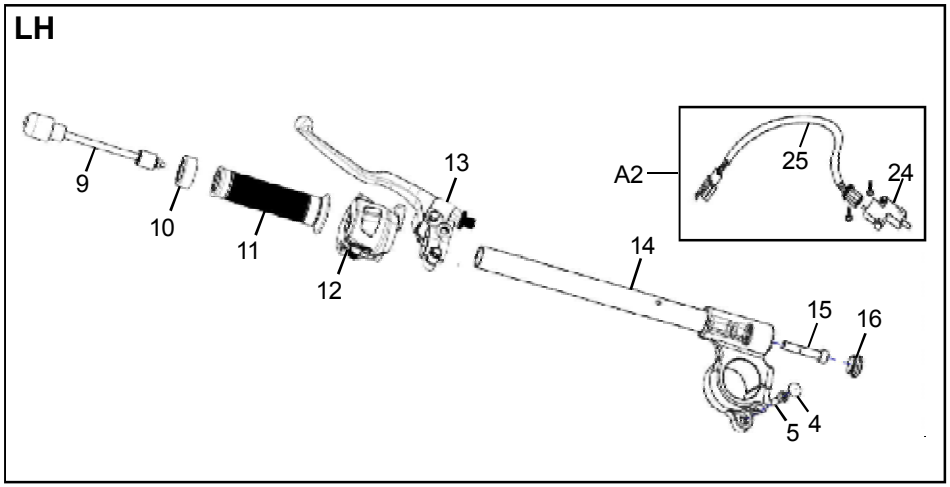

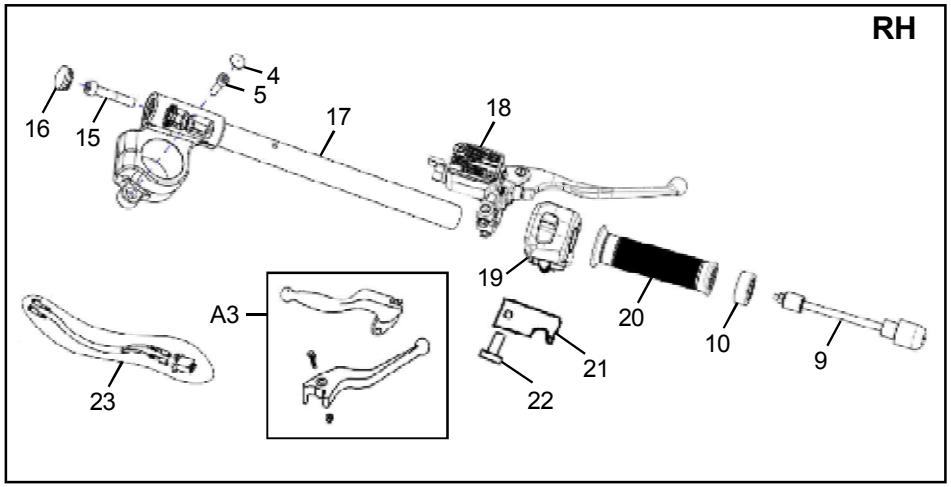

08 - 15 HANDLE BAR & CONTROLS - CONTINENTAL GT

Key No.	Part Number	Description	Qty	Bullet EFI	Classic				Conti GT	Remarks
					500	DS	BG	Chrome		
22	591522/a	Pan Head Screw M5 X 10	1						●	
23	585460/a	Add On Lead, Brake Switch	1						●	
24	560632	Clutch Switch	1						●	
25	585459/b	Add On Lead, Clutch Switch	1						●	

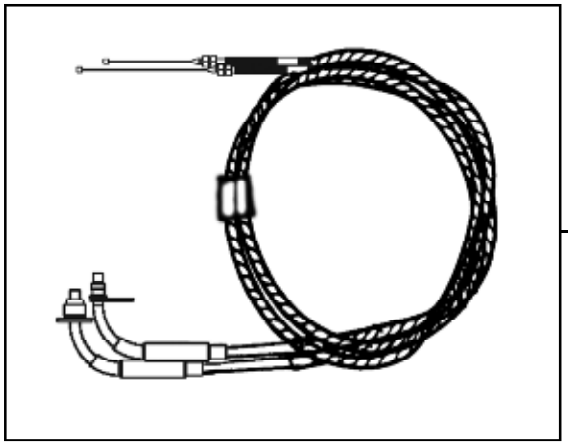

1

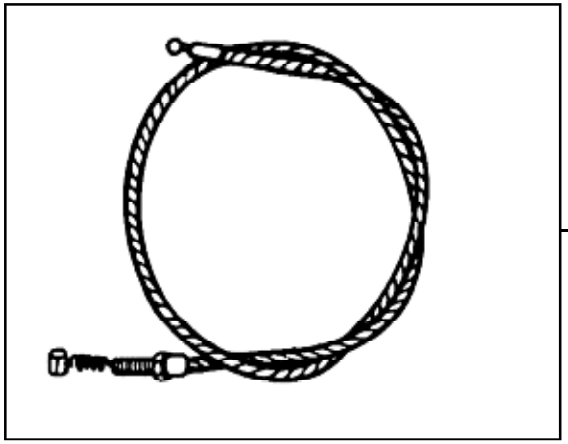

2

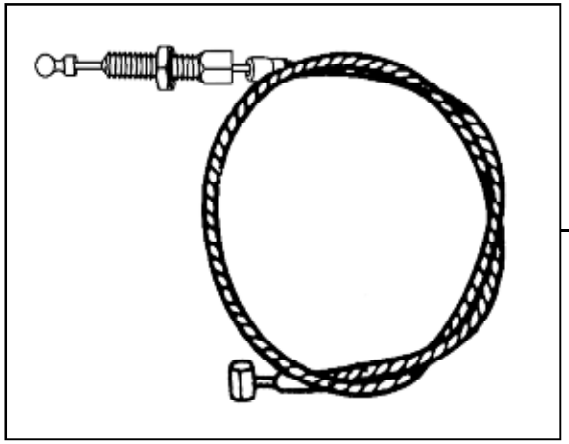

3

09 - 10 CONTROL CABLES

Key No.	Part Number	Description	Qty	Bullet EFI	Classic				Conti GT	Remarks
					500	DS	BG	Chrome		
1	581018/a	Throttle Cable Assembly (Twin Cable)	1	●	●	●	●	●		
	585620/a	Throttle Cable Assembly (Twin Cable)	1						●	
2	581032/b	BI Starter Cable	1	●	●	●	●	●	●	
3	571156/c	Clutch Cable Assembly	1	●	●	●	●	●		
	590913/a	Clutch Cable Assembly	1						●	

10 -10 STEERING STEM & HEAD LAMP CASING - BULLET EFI & CLASSIC MODELS

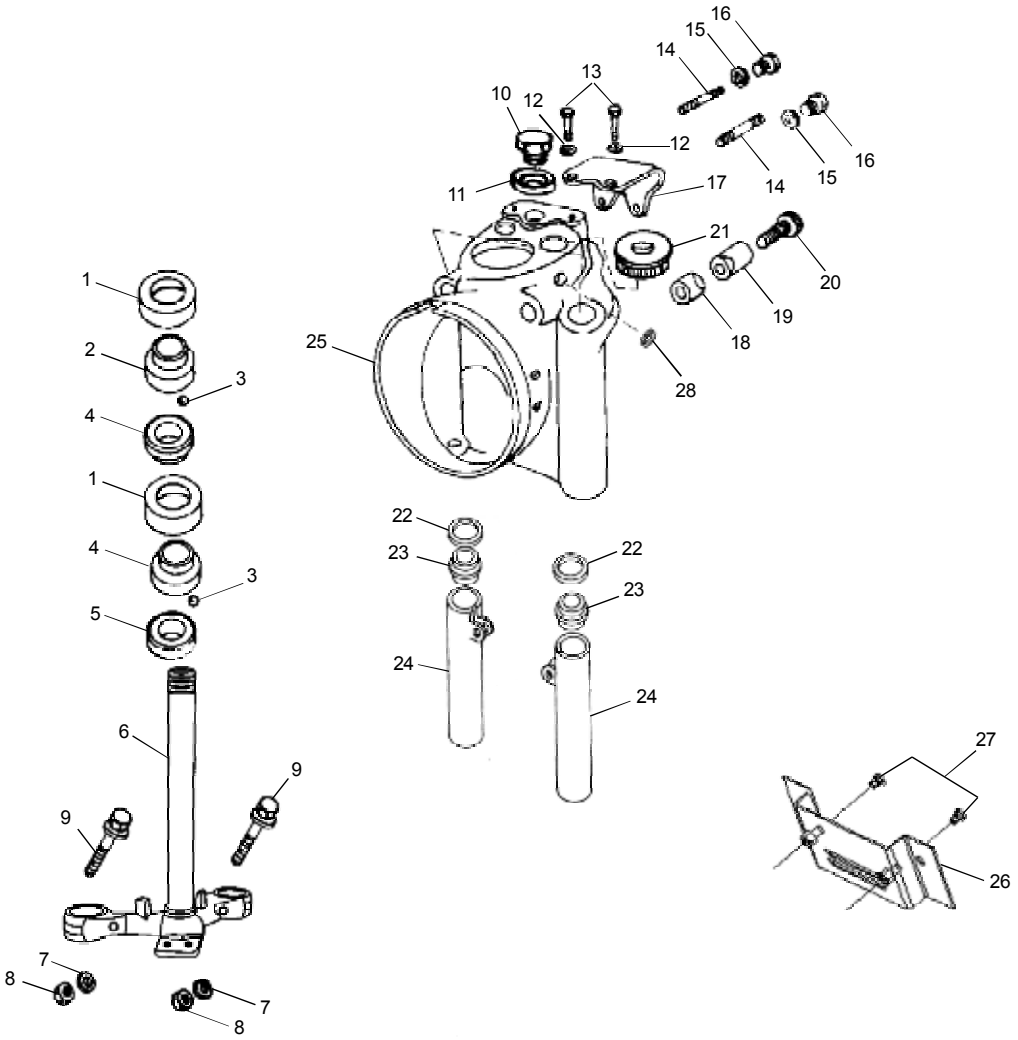

10 -10 STEERING STEM & HEAD LAMP CASING - BULLET EFI & CLASSIC MODELS

Key No.	Part Number	Description	Qty	Bullet EFI	Classic				Conti GT	Remarks
					500	DS	BG	Chrome		
1	145446/a	Cover	2	●	●	●	●	●		
2	144583/f	Ball Race, Head Lamp Casing	1	●	●	●	●	●		
3	584065/a	Steering Stem Ball Cage	2	●	●	●	●	●		
4	144582/f	Ball Race, Frame	2	●	●	●	●	●		
5	144581/f	Ball Race, Fork Crown	1	●	●	●	●	●		
6	801275	Steering Stem Assy. - Black	1	●	●			●		Also for Tan, Lagoon & Chrome Models
	858031	Steering Stem Assy - Squadron Blue	1		●					
	873018	Steering Stem Assy. - Desert storm	1			●				
	825204	Steering Stem Assy. - Battle Green	1				●			
7	586005/a	Flanged Hex Nut M8 x 7.7 X 8	2	●	●	●	●	●		
8	586004/a	Hex Nut with Nylock insert - M8 X 9.5	2	●	●	●	●	●		
9	591462/a	Flange Bolt (M8 × 75)	2	●	●	●	●	●		
10	110116/b	Stem Lock Nut	1	●	●	●	●	●		
11	140189/3	Steering Stem Lock Nut Washer	1	●	●	●	●	●		
12	146610/a	Washer	2	●	●	●	●	●		
13	146032/a	Hex SS Bolt M8 x 48	2	●	●	●	●	●		
14	143818/1	Stud (M8×32)	2	●	●	●	●	●		
15	140206/5	Washer	2	●	●	●	●	●		
16	143825/1	Nut	2	●	●	●	●	●		
17	140202/b	Clip, Handle Bar	1	●	●	●	●	●		
18	147561/a	Sleeve, Threaded	1	●	●	●	●	●		
19	140196/d	Sleeve, Plain	1	●	●	●	●	●		
20	147560/a	Hex Socket head Cap Screw M10 x 1.5 x 35	1	●	●	●	●	●		
21	593191/a	Adaptor AHO	1	●	●	●	●	●		

10 -10 STEERING STEM & HEAD LAMP CASING - BULLET EFI & CLASSIC MODELS

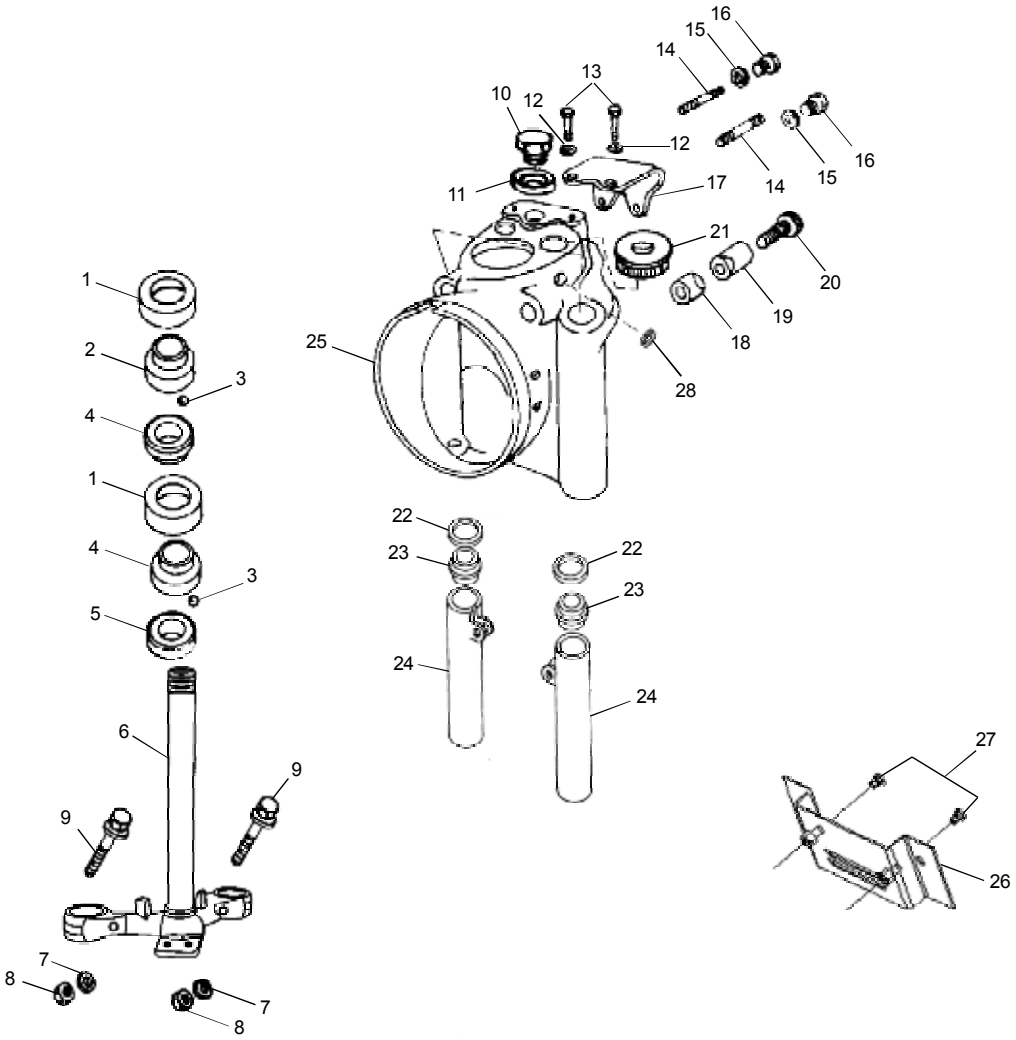

10 -10 STEERING STEM & HEAD LAMP CASING - BULLET EFI & CLASSIC MODELS

Key No.	Part Number	Description	Qty	Bullet EFI	Classic				Conti GT	Remarks
					500	DS	BG	Chrome		
22	140193/b	Rubber Spacer	2	●	●	●	●	●		
23	143906/b	Bush	2	●	●	●	●	●		
24	866013	Cover Tube - Black	2	●	●			●		Also for Tan, Lagoon & Chrome Black models
	806094	Cover Tube - Marsh Grey	2	●				●		Also for Chrome Graphite models
	880006	Cover Tube - Forest Green	2	●				●		Also for Chrome Green models
	858015	Cover Tube- Squadron Blue	2		●					
	873005	Cover Tube - Desert Storm	2			●				
	825404	Cover Tube - Battle Green	2				●			
25	801604	Head Lamp Casing - Black	1	●	●			●		Also for Tan, Lagoon & Chrome Black models
	806102	Head Lamp Casing - Marsh Grey	1	●				●		Also for Chrome Graphite models
	880005	Head Lamp Casing - Forest Green	1	●				●		Also for Chrome Green models
	858026	Head Lamp Casing - Squadron Blue	1		●					
	873056	Head Lamp Casing - Desert Storm	1			●				
	825362	Head Lamp Casing - Battle Green	1				●			
26	866149	Rr Cover Comp C5 Black BVI	1	●	●			●		Also for Marsh Grey & Forest Green Bullet models
	858041	Rr Cover Comp C5 Squadron Blue	1		●					
	873045	RR COVER COMP C5 Desert Storm	1			●				
	825392	RR COVER COMP C5 Battle Green	1				●			
	806112	Rr Cover Comp C5 Marsh Grey	1					●		
	880028	Rr Cover Comp C5 Forest Green	1					●		
27	145883/A	Slotted Rd. Hd.Screw	2	●	●	●	●	●		
28	582518/a	Rubber Grommet	2	●	●	●	●	●		

10 - 15 STEERING STEM ASSEMBLY - CONTINENTAL GT

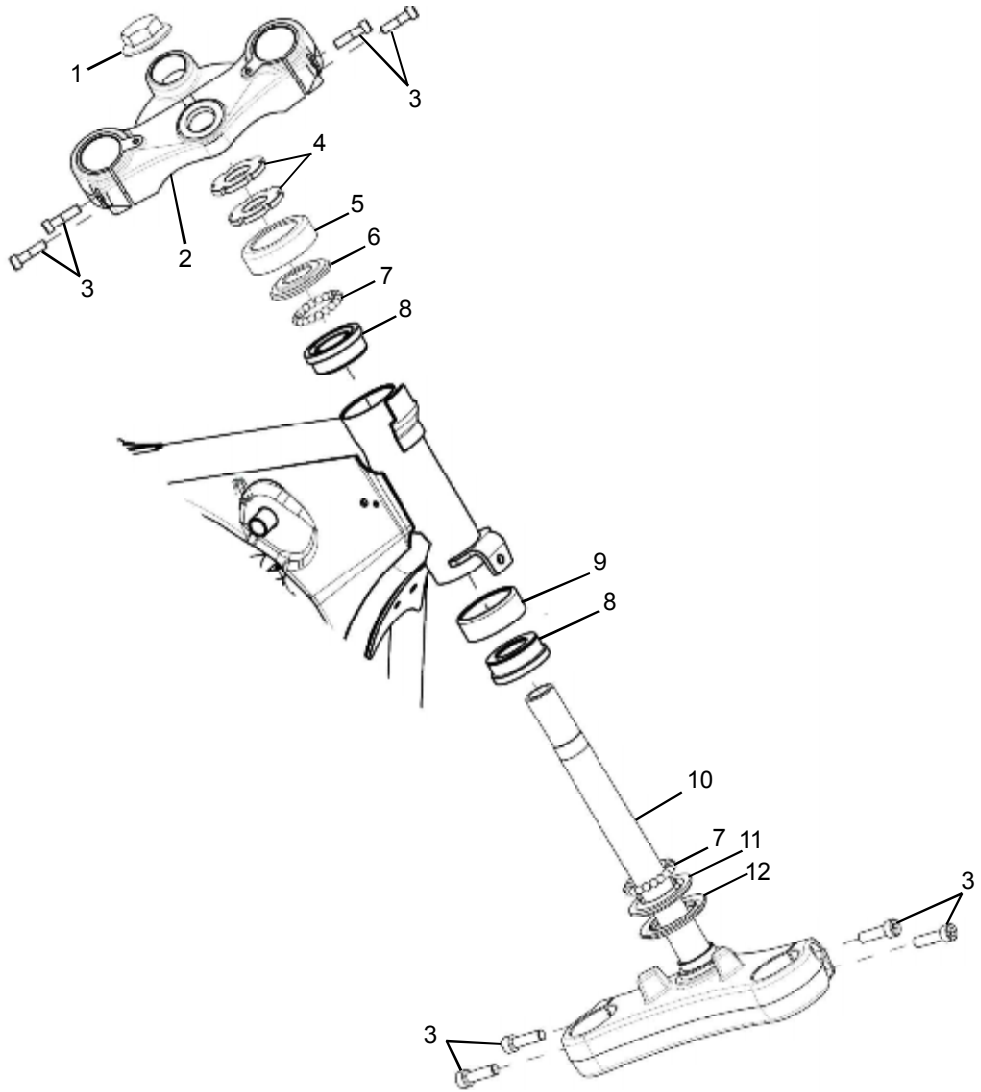

10 - 15 STEERING STEM ASSEMBLY - CONTINENTAL GT

Key No.	Part Number	Description	Qty	Bullet EFI	Classic				Conti GT	Remarks
					500	DS	BG	Chrome		
1	594286/a	Lock Nut	1						●	
2	585042/a	Top Yoke	1						●	
3	594215/a	Hex. Socket Head Bolt M8 X 35	8						●	
4	594287/a	Ring Nut	2						●	
5	585356/a	Dust Cap - Top Yoke	1						●	
6	585353/b	Ball Race - Top Yoke	1						●	
7	584065/a	Steering stem - Ball Cage	2						●	
8	585355/c	Ball Race - Frame Head Tube	2						●	
9	585357/a	Dust Cap - Frame	1						●	
10	585044/b	Steering Stem Assembly	1						●	
11	585003/b	Ball Race - Bottom Yoke	1						●	
12	585561/a	Dust Seal - Bottom Yoke	1						●	

11 - 10 FRONT FORK - BULLET EFI & CLASSIC MODELS

A1

Key Nos.
1 to 3, 5 to 20

A2

Key Nos.
1, 2, 4 to 20

A3

Key Nos.
Qty 2 Nos. 2, 7, 9, 11, 15 & 20

A4

Key Nos.
Qty 2 Nos. 2, 7, 9, 15 & 20

A5

Key Nos.
Qty. 2 Nos. 16, 20 & 22

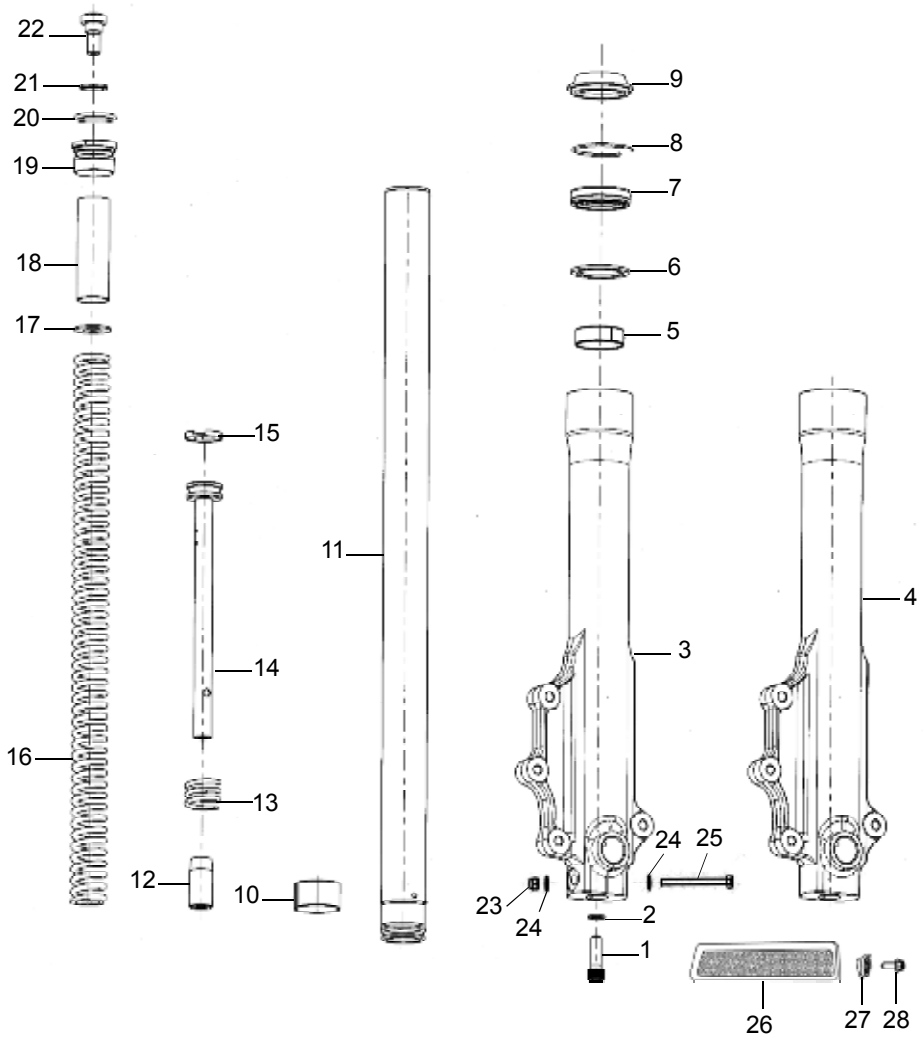

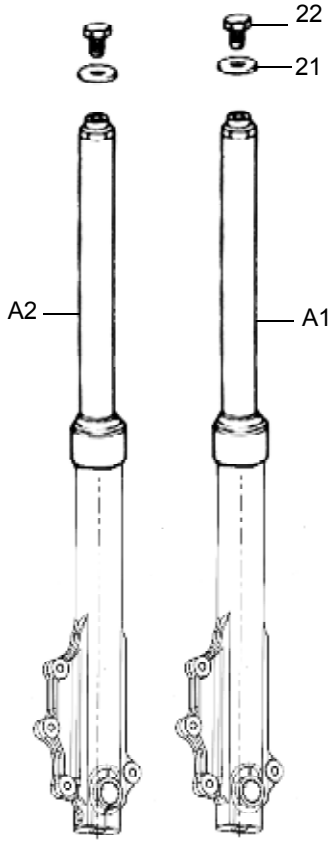

11 - 10 FRONT FORK - BULLET EFI & CLASSIC MODELS

Key No.	Part Number	Description	Qty	Bullet EFI	Classic				Conti GT	Remarks
					500	DS	BG	Chrome		
A1	1010037/a	Front Fork Assy - LH	1	●	●	●	●	●		
A2	1010114/a	Front Fork Assy - RH	1	●	●	●	●	●		
A3	888040	Fork Pipe Spining Replacement Kit	1	●	●	●	●	●		
A4	888044	Fork Oil Seal, ‘O’-Ring & Piston Ring Kit	1	●	●	●	●	●		
A5	888041	Main Spring Front Fork Replacement Kit	1	●	●	●	●	●		
1	147077/a	Socket Headed Bolt	2	●	●	●	●	●		
2	147074/a	Copper Packing Washer	2	●	●	●	●	●		
3	1010115/a	Outer Tube M/C - RH (Fork End)	1	●	●	●	●	●		
4	1010038/a	Outer Tube M/C - LH (Fork End)	1	●	●	●	●	●		
5	593992/a	Guide Bush	2	●	●	●	●	●		
6	593994/a	Plain Washer Big	2	●	●	●	●	●		
7	591828/a	Oil Seal - LH & RH Front Fork	2	●	●	●	●	●		
8	591827/a	Oil Seal Stopper - LH & RH	2	●	●	●	●	●		
9	591826/a	Dust Seal - LH & RH	2	●	●	●	●	●		
10	593993/a	Slide Bush	1	●	●	●	●	●		
11	593990/a	Fork Pipe Spining - Inline Fork	2	●	●	●	●	●		
12	147078/a	Cap Oil Lock (Spindle Tapper)	2	●	●	●	●	●		
13	147090/a	Rebound Spring	2	●	●	●	●	●		
14	147092/a	Seat Pipe	2	●	●	●	●	●		
15	147082/a	Piston Ring - Front Fork	2	●	●	●	●	●		
16	591512/a	Main Spring	2	●	●	●	●	●		
17	591513/a	Washer - Fork Main Spring	2	●	●	●	●	●		
18	593991/a	Spacer Tube - Front Fork	2	●	●	●	●	●		
19	591825/a	Fork Bolt - Top	2	●	●	●	●	●		

11 - 10 FRONT FORK - BULLET EFI & CLASSIC MODELS

A1

Key Nos.
1 to 3, 5 to 20

A2

Key Nos.
1, 2, 4 to 20

A3

Key Nos.
Qty 2 Nos. 2, 7, 9, 11, 15 & 20

A4

Key Nos.
Qty 2 Nos. 2, 7, 9, 15 & 20

A5

Key Nos.
Qty. 2 Nos. 16, 20 & 22

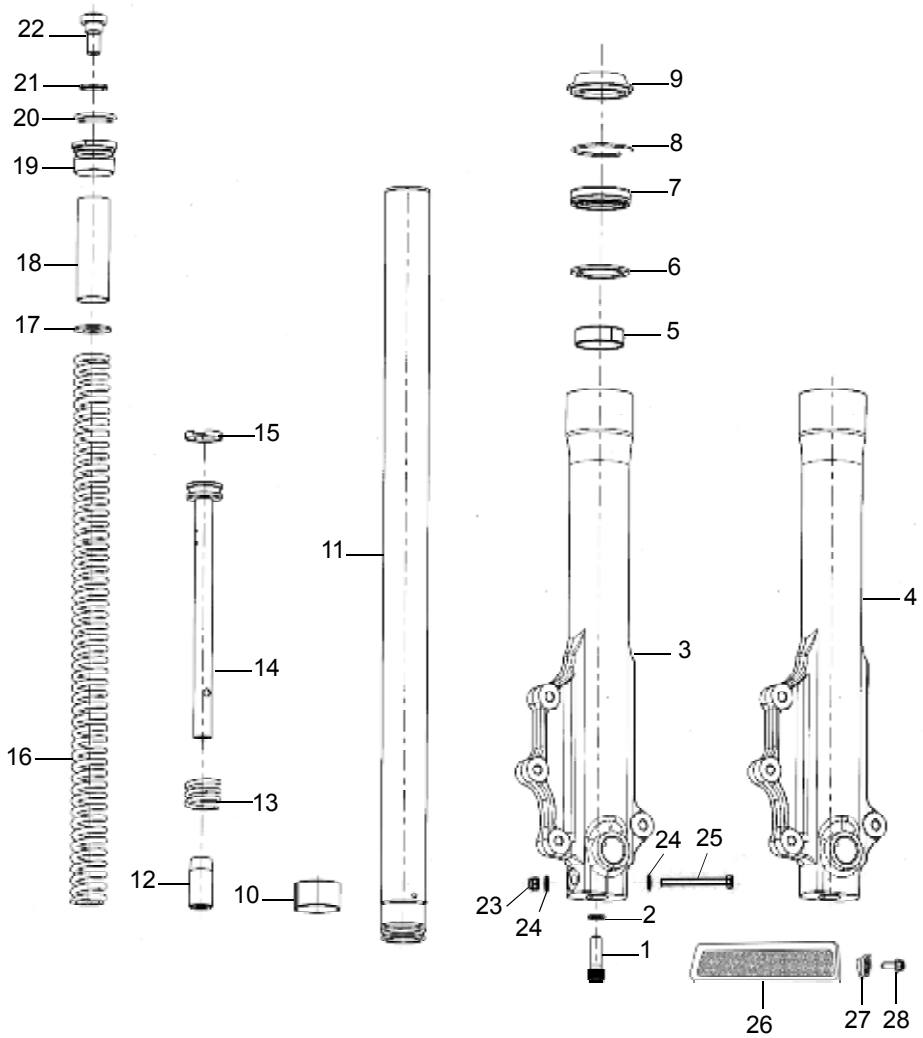

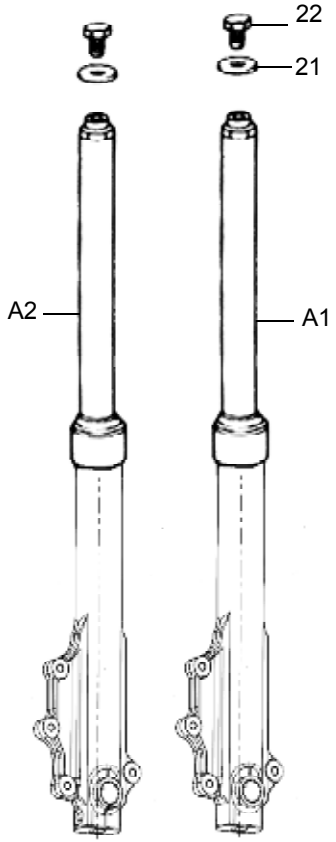

11 - 10 FRONT FORK - BULLET EFI & CLASSIC MODELS

Key No.	Part Number	Description	Qty	Bullet EFI	Classic				Conti GT	Remarks
					500	DS	BG	Chrome		
20	147081/a	'O' Ring - Fork Bolt Top	2	●	●	●	●	●		
21	147076/a	Plain Washer - Fork Bolt	2	●	●	●	●	●		
22	147088/a	Flange Bolt	2	●	●	●	●	●		
23	593030/b	Hex Nylock Nut M8 X 9.5	1	●	●	●	●	●		
24	593004/a	Punched Washer	2	●	●	●	●	●		
25	593144/a	Flanged Hex. Bolt M8 X 55 (Special)	1	●	●	●	●	●		
26	143746/a	Reflex Reflector (Amber)	2	●	●	●	●	●		
27	585217/b	Wheel Speed Sensor-ABS	1	●	●	●	●	●		
28	594046/a	Hex.Socket Button Head Screrw M6X1X16	1	●	●	●	●	●		

11 - 15 FRONT FORK - CONTINENTAL GT

A1	A2	A3
Key Nos.	Key Nos.	Key Nos.
All Except 2	All Except 1 & 19	Each Qty. 2 Nos. 3, 7, 9, 11, 17 & 20

A4	A5
Key Nos.	Key Nos.
Each Qty. 2 Nos. 7, 9, 11, 17 & 20	(Qty. 2 Nos. 13), 16 & 17

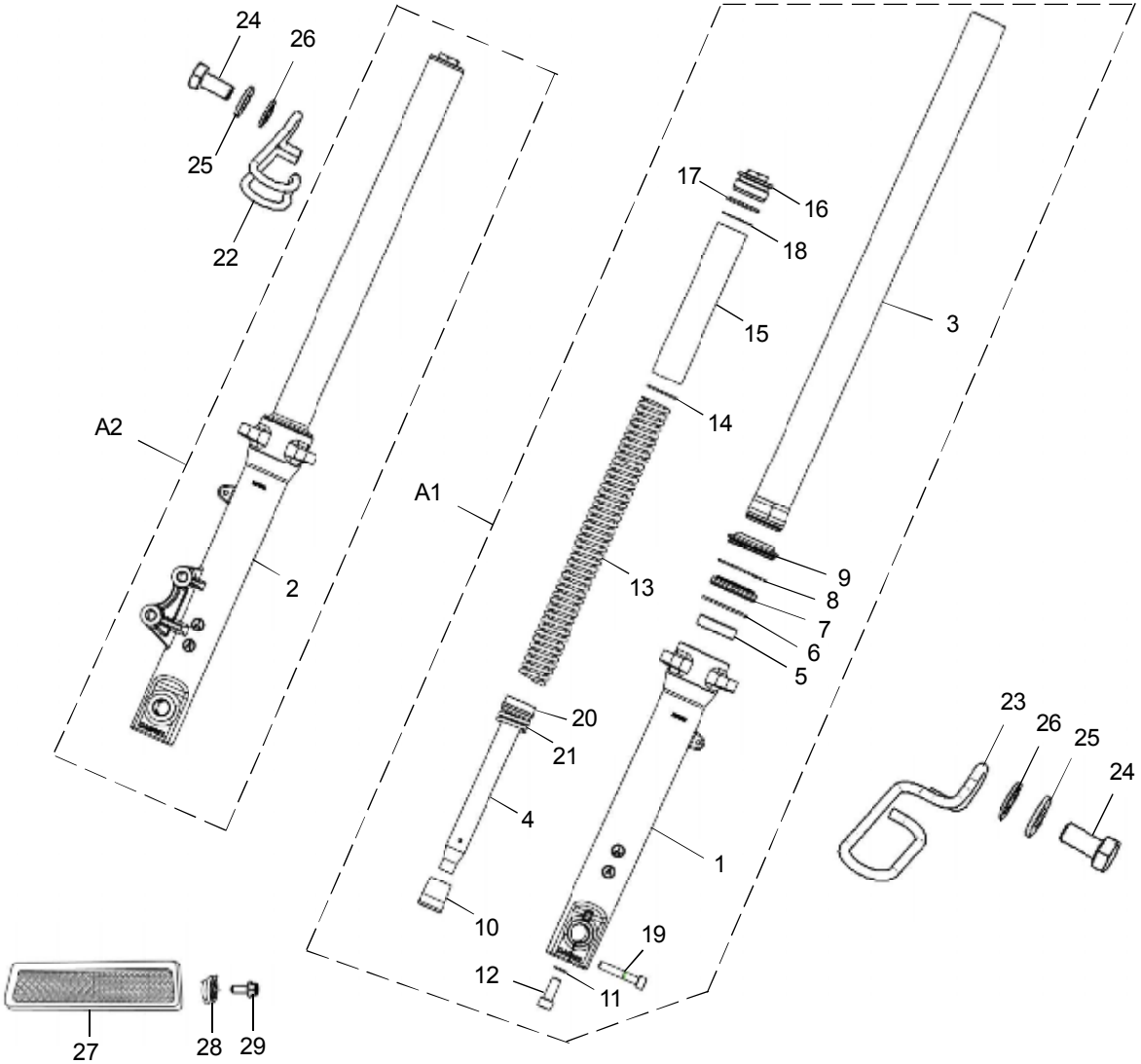

11 - 15 FRONT FORK - CONTINENTAL GT

Key No.	Part Number	Description	Qty	Bullet EFI	Classic				Conti GT	Remarks
					500	DS	BG	Chrome		
A1	585220/a	Fork End LH assy	1						●	
A2	1010116/a	Fork End RH assy	1						●	
A3	888326	Fork Pipe Spinning Replacement Kit	1						●	
A4	888136	Fork Oil Seal, ‘O’ Ring & Piston Ring Kit	1						●	
A5	888327	Main Spring Fork Major Kit	1						●	
1	1010127/a	Outer Tube - RH	1						●	
2	1010038/a	Outer Tube - LH	1						●	
3	585089/a	Inner Tube Assy.	2						●	
4	585373/a	Piston - Front Fork	2						●	
5	594404/a	Bush (Outer Tube)	2						●	
6	594405/a	Bush Washer	2						●	
7	594406/a	Oil Seal	2						●	
8	594407/a	Circlip (Snap - Ring)	2						●	
9	594408/a	Dust Seal	2						●	
10	594409/a	Spindle Taper	2						●	
11	594410/a	Gasket	2						●	
12	594411/a	Bolt M10X1	2						●	
13	585175/a	Spring – 1	2						●	
14	594413/a	Washer Spring Top	2						●	
15	585176/a	Spacer	2						●	
16	585226/a	Bolt Cap	2						●	
17	594416/a	‘O’ Ring	2						●	
18	594418/a	Washer - 2	2						●	
19	594419/a	Bolt M8 X 1.25 X 45	2						●	

11 - 15 FRONT FORK - CONTINENTAL GT

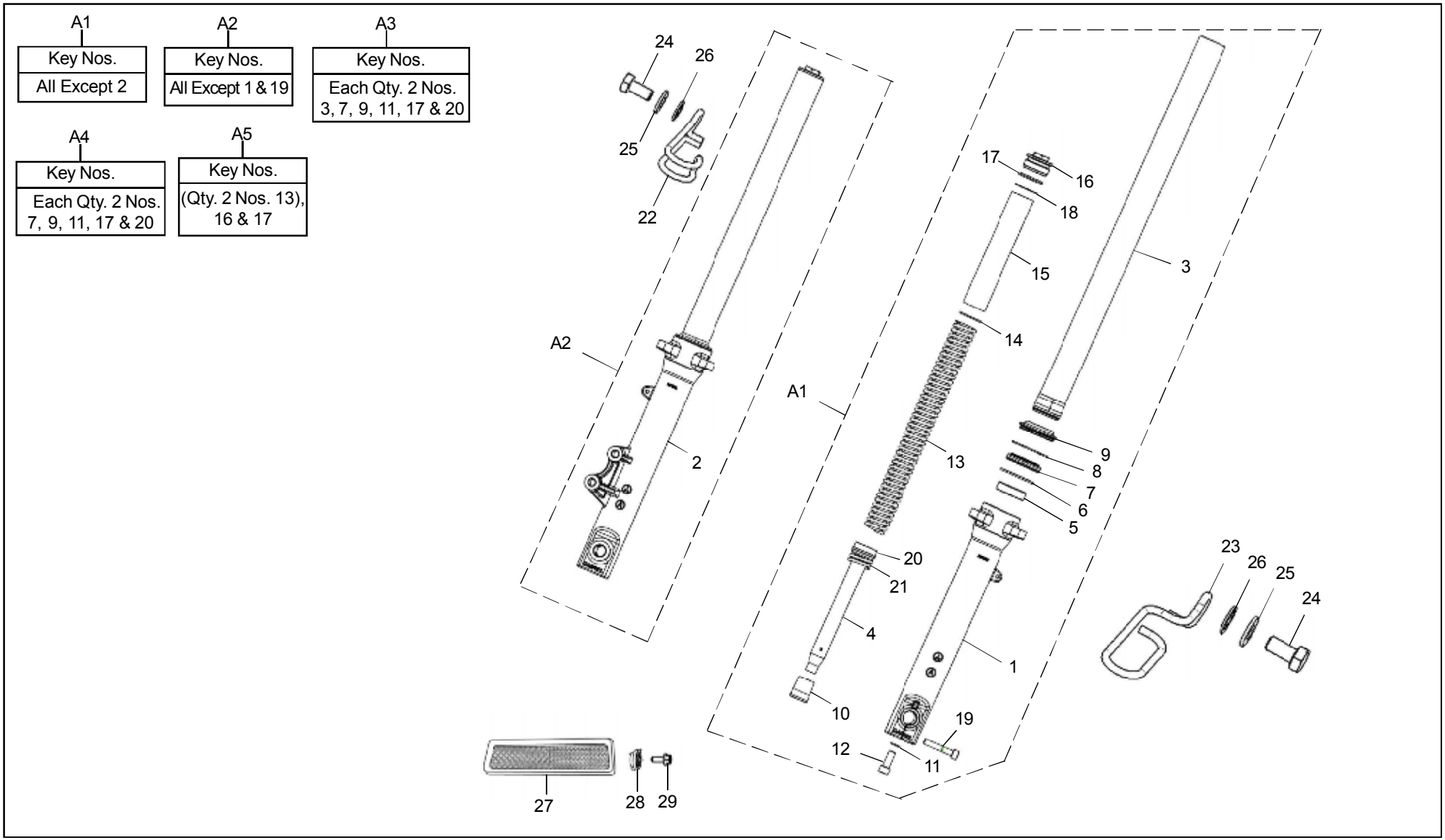

11 - 15 FRONT FORK - CONTINENTAL GT

Key No.	Part Number	Description	Qty	Bullet EFI	Classic				Conti GT	Remarks
					500	DS	BG	Chrome		
20	594552/a	Piston Ring	2						●	
21	594553/a	Spring - 2	2						●	
22	594233/a	Cable Guide - Brake	1						●	
23	594078/b	Cable Guide - Speedo Cable	1						●	
24	591702/a	Hex. Bolt M6 X 12 2	2						●	
25	586032/a	Plain Washer	2						●	
26	586031/a	Lock Washer, M6	2						●	
27	143746/a	Reflex Reflector Amber	2						●	
28	585217/b	Wheel Speed Sensor-ABS	2						●	
29	594046/b	Hex.Socket Button Head Screrw M6 X 1 X 16	1						●	

12 - 10 FRONT MUDGUARD - BULLET EFI & CLASSIC MODELS

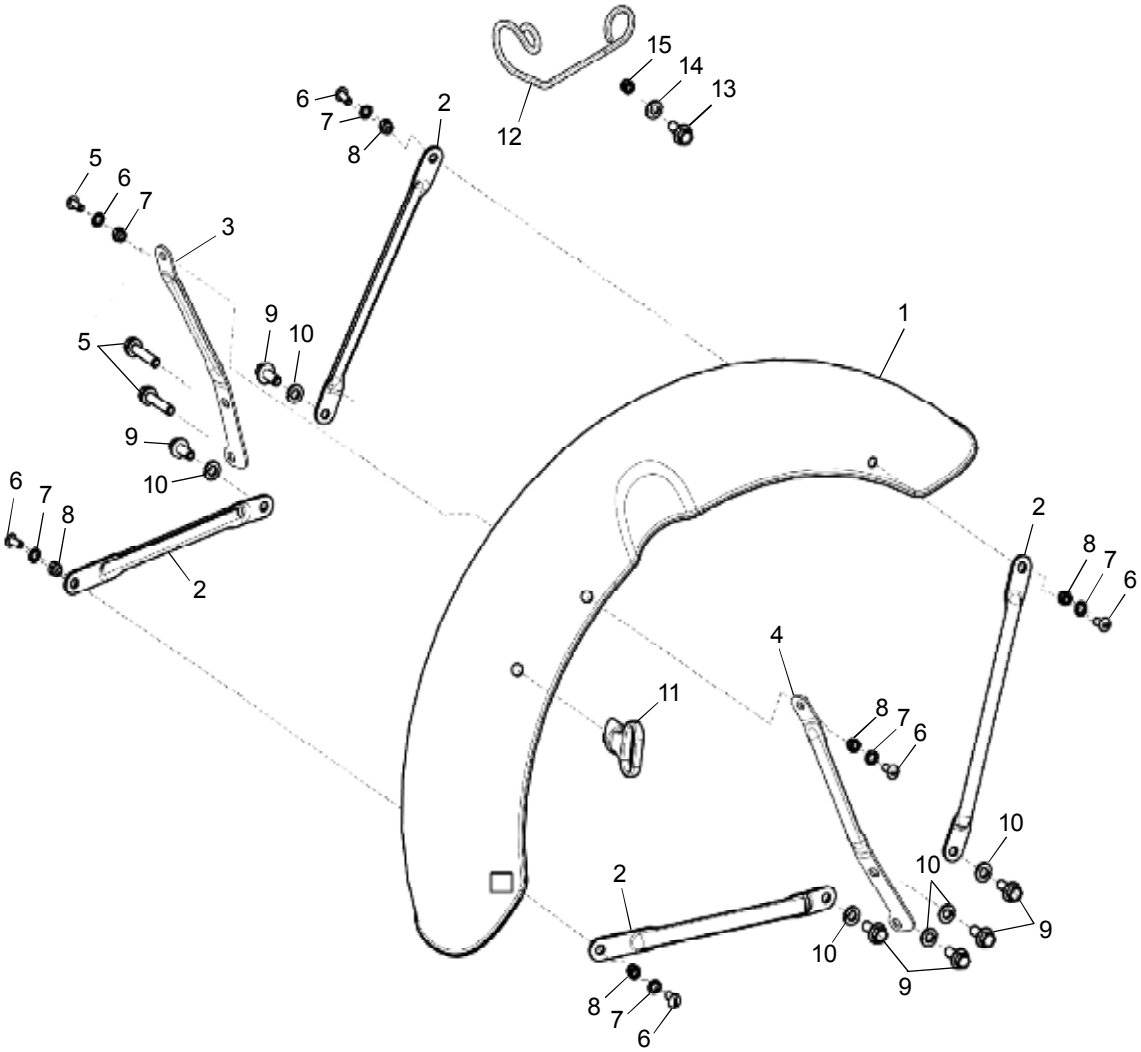

12 - 10 FRONT MUDGUARD - BULLET EFI & CLASSIC MODELS

Key No.	Part Number	Description	Qty	Bullet EFI	Classic				Conti GT	Remarks
					500	DS	BG	Chrome		
1	866258	Front Mudguard-Black	1	●						
	880068	Front Mudguard-Forest Green	1	●						
	806134	Front Mudguard-Marsh Grey	1	●						
	866243	Mudguard Front Cl500 Classic Black EU IV	1		●					
	858060	Mudguard Front Cl500 Squadron Blue EU IV	1		●					
	881038	Mudguard Front Cl500 Classic Tan EU IV	1		●					
	818032	Mudguard Front Cl500 Clasic Lagoon EU IV	1		●					
	873106	Mudguard Front Cl500 Cl Des.Storm EU IV	1			●				
	825580	Mudguard Front Cl500 Olive Green EU IV	1				●			
	866249	Mudguard Front Cl500 Chrm Black Euro IV	1					●		
	806127	Mudguard Front Cl500 Chrm Graphit Euro IV	1					●		
	880058	Mudguard Front Cl500 Cl Chrm Green EU IV	1					●		
2	866067	Mudguard Stay Front Black Mod	4	●	●					Also for Tan & Lagoon models
	858012	Mudguard Stay Front Cl 500 Squadron Blue	4		●					
	873036	Mudguard Stay Front Cl 500 D.Storm Mod	4			●				
	825493	Mudguard Stay Front Cl 500 OG Modified	4				●			
	868031	Ft Mud Stay Front&Rear-Cl500 Chrome Mod	4					●		
3	866097	Mudguard Stay Center LH Black New	1	●	●					Also for Tan & Lagoon models
	858013	Mdguard Stay Center LH Cl500 Sq. Blue	1		●					
	873070	Mudguard Stay Center LH Cl500 D.Storm Ne	1			●				
	825513	Mudguard Stay Center LH Cl500 OG New	1				●			
	593178/a	Ft Mud Stay Center LH - Cl500 Chrome Mod	1					●		
4	866098	Mudguard Stay Center RH Black New	1	●	●					Also for Tan & Lagoon models
	858014	Mudguard Stay Center RH Cl500 Sq.Blue	1		●					

12 - 10 FRONT MUDGUARD - BULLET EFI & CLASSIC MODELS

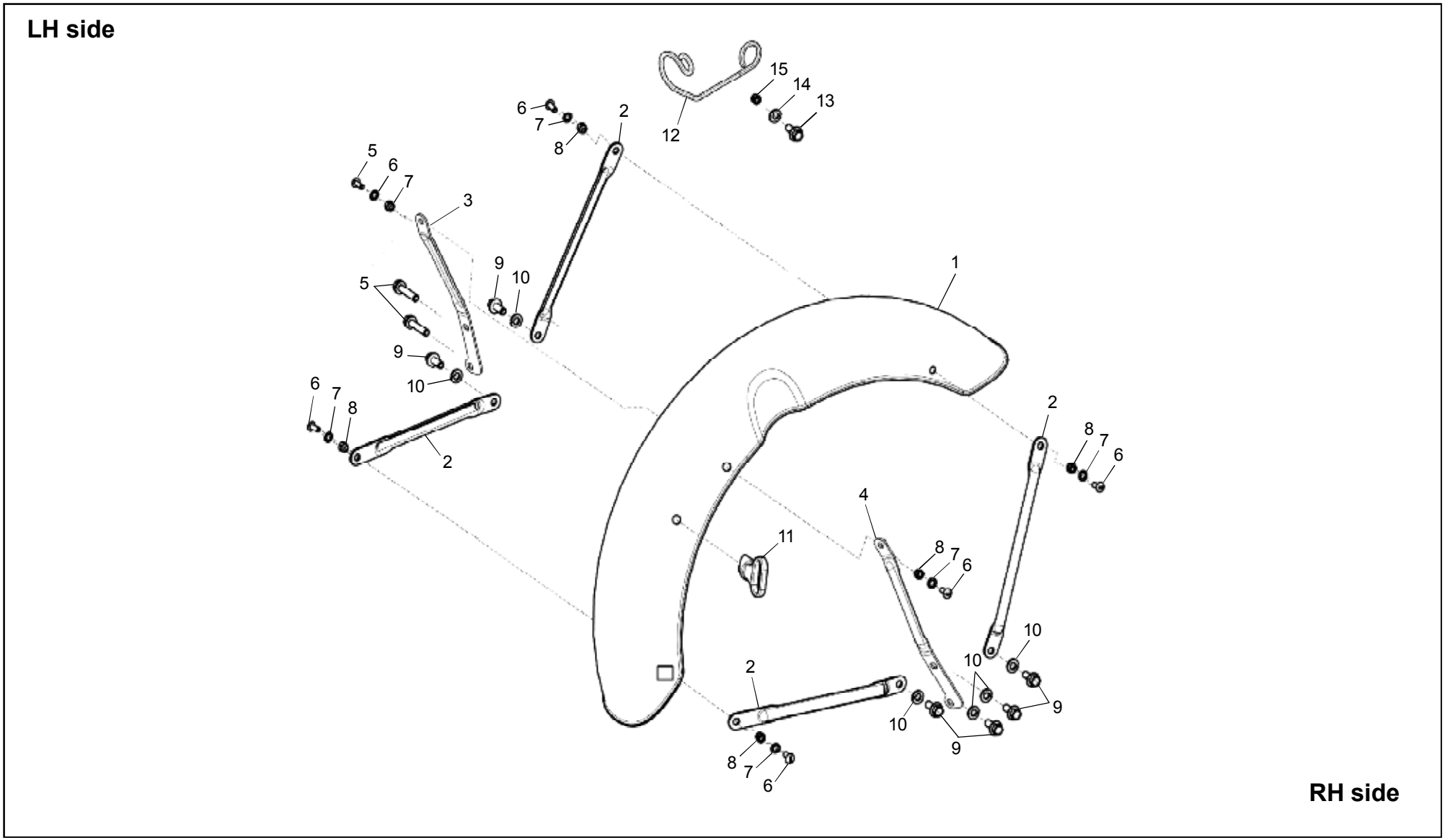

12 - 10 FRONT MUDGUARD - BULLET EFI & CLASSIC MODELS

Key No.	Part Number	Description	Qty	Bullet EFI	Classic				Conti GT	Remarks
					500	DS	BG	Chrome		
4	873071	Mudguard Stay Center RH Cl500 D.Storm Ne	1			●				
	825514	Mudguard Stay Center RH Cl500 OG New	1				●			
	593179/a	Ft Mud Stay Center RH - Cl500 Chrome Mod	1					●		
5	593234/b	Hex Flanged Bolt M8 X 1.25 X 38	2	●	●	●	●	●		
6	593232/a	Phillips Round Head Machined Screw M6 X 13	6	●	●	●	●	●		
7	586031/A	Lock Washer M6	6	●	●	●	●	●		
8	586029/a	Hex Nut M6 X 1	6	●	●	●	●	●		
9	586111/a	Flanged Hex Bolt M8 X 20	6	●	●	●	●	●		
10	593056/a	Spring Washer	6	●	●	●	●	●		
11	142532/b	Cable Guide	1	●	●	●	●	●		
12	1010180/c	Clamp - Front Caliper Brake Hose	1	●	●	●	●	●		
13	145882/a	Cross Recessed Pan Head Screw M6 X 14	1	●	●	●	●	●		
14	586032/a	Plain Washer M6	1	●	●	●	●	●		
15	141060	Hex. Nut M6 X 1 X 5	1	●	●	●	●	●		

12 - 15 FRONT MUDGUARD - CONTINENTAL GT

A1

Key Nos.
2, 5, 6 & 7

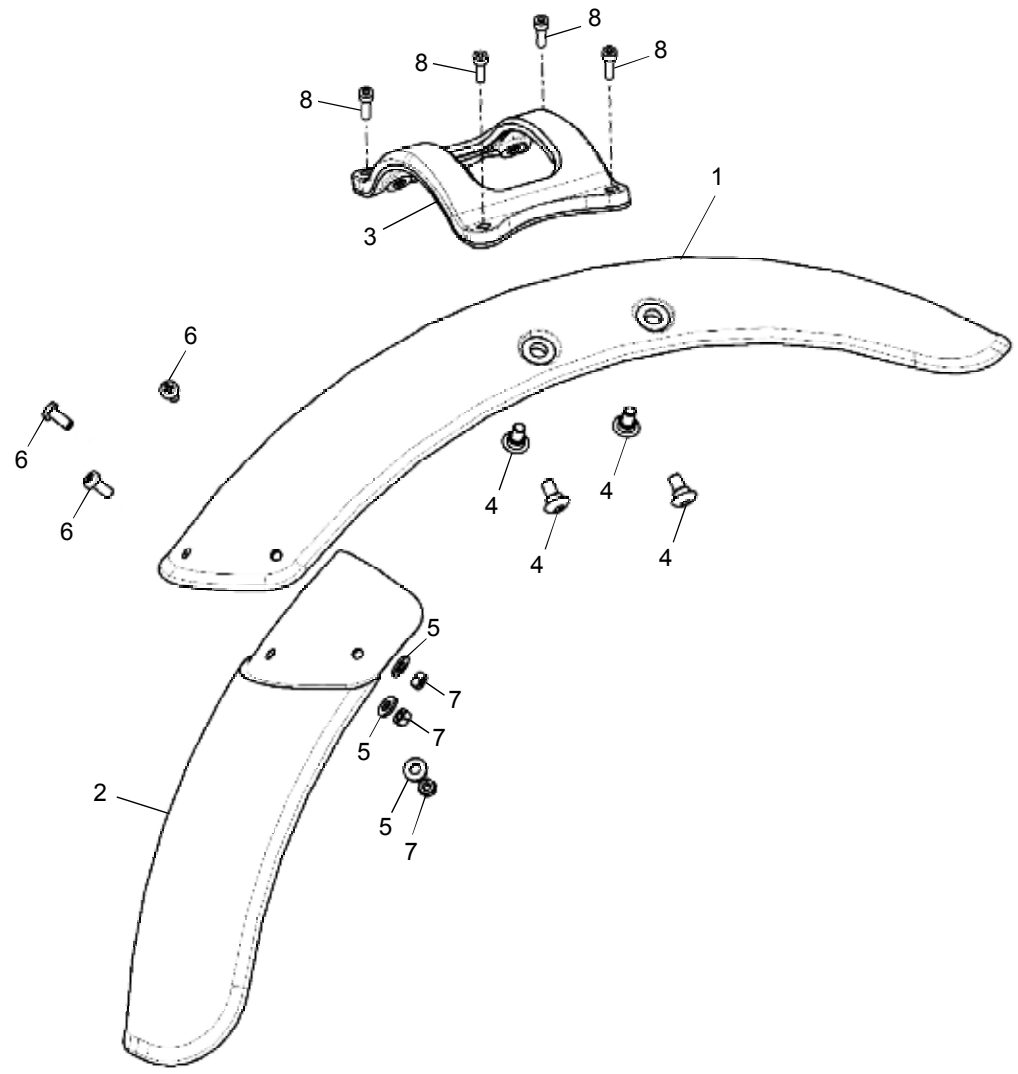

12 - 15 FRONT MUDGUARD - CONTINENTAL GT

Key No.	Part Number	Description	Qty	Bullet EFI	Classic				Conti GT	Remarks
					500	DS	BG	Chrome		
A1	888270	Front Mudguard Mud Flap,Extension Kit	1						●	
1	585362/b	Front Mudguard	1						●	
2	585600/b	Mud - Flap Front	1						●	
3	585363/b	Fork Brace	1						●	
4	585666/A	Hex. Socket Button Head Screw M6X1	4						●	
5	140508	Lock Washer Internal Teeth	3						●	
6	147491/A	Pan Head Screw M5 X 0.8 X 12	3						●	
7	141862	Hex. Nut M8	3						●	
8	570030	Hex. Socket HD. Cap Screw M6X20 Stainless Steel	4						●	

13 - 10 FRONT WHEEL - BULLET EFI & CLASSIC MODELS

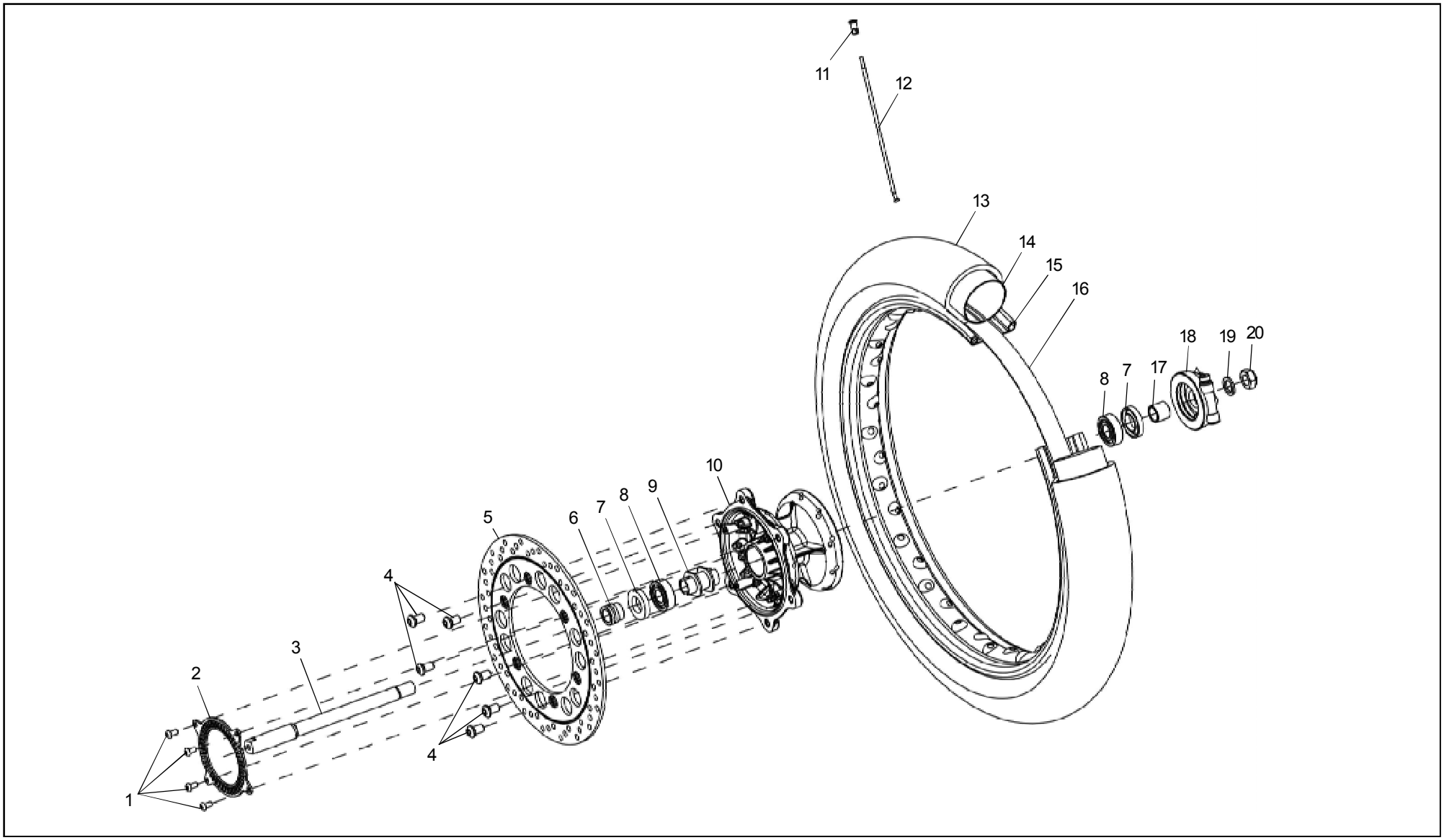

13 - 10 FRONT WHEEL - BULLET EFI & CLASSIC MODELS

Key No.	Part Number	Description	Qty	Bullet EFI	Classic				Conti GT	Remarks
					500	DS	BG	Chrome		
A1	1010029/c	Front Wheel complete assy with tyre & tube	1	●	●	●		●		
	1010318/A	**Front Wheel Assembly - Olive Green**	1				●			
1	587649/a	Hex Socket Button Head Screw M6*1.0	4	●	●	●	●	●		
2	1010031/c	Toner Front Wheel	1	●	●	●	●	●		
3	593001/d	Spindle	1	●	●	●	●	●		
4	560530/d	Socket Button Head Cap Screw	6	●	●	●	●	●		
5	147652/b	Disc Front	1	●	●	●	●	●		
6	593062/c	Spacer, Disc Side	1	●	●	●	●	●		
7	141109/1	Grease Seal, 25 X 40 X 7	2	●	●	●	●	●		
8	150324/a	Wheel Bearing 6203 (17 X 40 X 12)	2	●	●	●	●	●		
9	560521/b	Spacer Assy	1	●	●	●	●	●		
10	891060	Front Hub, Texture Silver	1	●	●	●	●	●		
	825579	Front Hub, Olive Green	1				●			
11	143885	Brass Nipples	40	●	●	●	●	●		
12	1010030/b	Spokes Front	40	●	●	●	●	●		
13	146126	90/90 - 19 52 V Front Tyre Import	1	●	●	●	●	●		
14	110280	Tube(Tyre) 3.25X19	1	●	●	●	●	●		
15	147507/a	Wheel Rim (1.85 X 19" -1.5 Thk)	1	●	●	●	●	●		
16	140355/b	Rim Tape	1	●	●	●	●	●		
17	1010139/a	Spacer Speedodrive	1	●	●	●	●	●		
18	592630/b	Speedo DrIve Assy Disc Brake	1	●	●	●	●	●		
19	586070/a	Plain Washer,M16	1	●	●	●	●	●		
20	586085/a	Hex U Nut M16 X 1.5	1	●	●	●	●	●		

13 - 15 FRONT WHEEL - CONTINENTAL GT

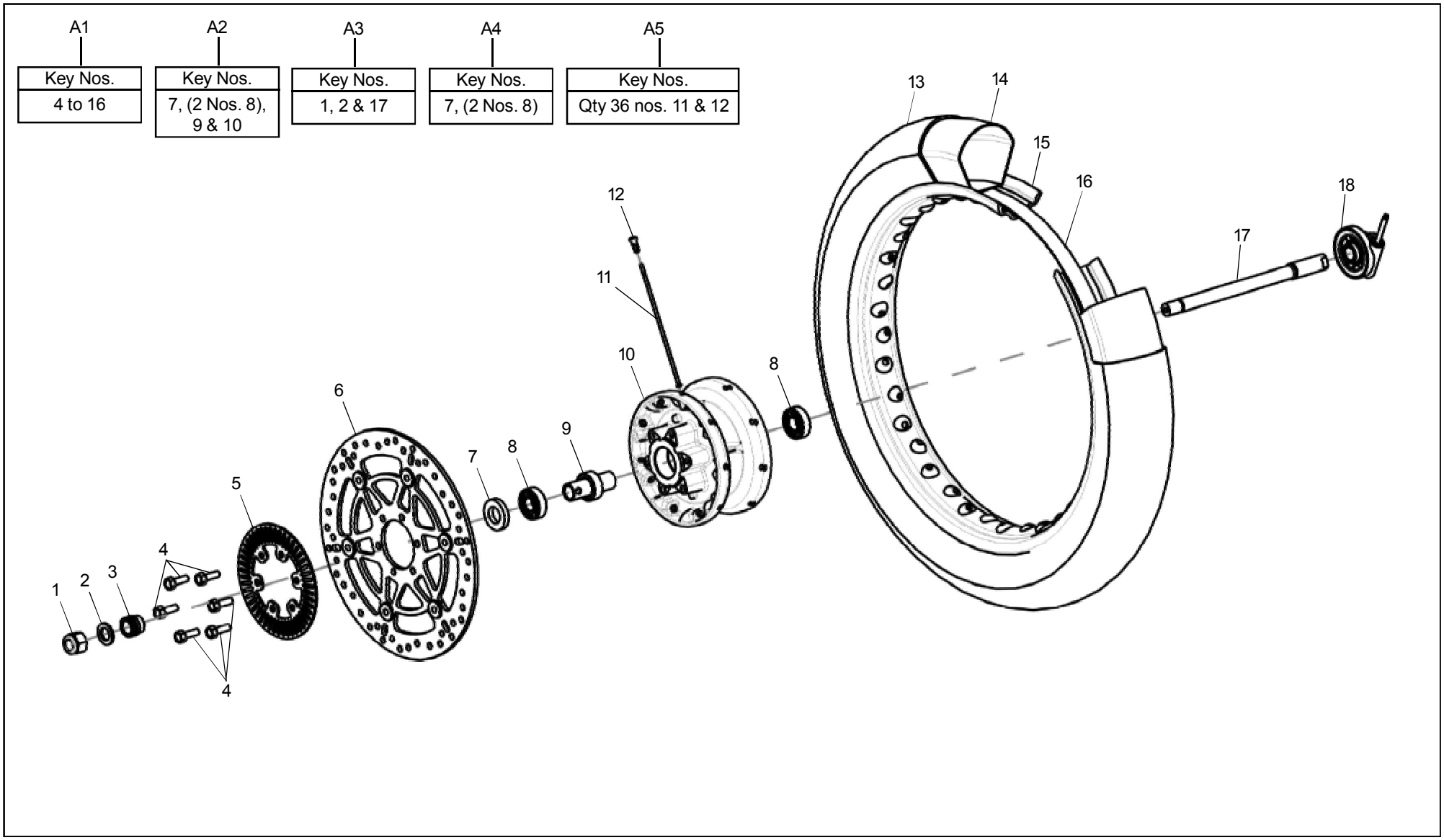

13 - 15 FRONT WHEEL - CONTINENTAL GT

Key No.	Part Number	Description	Qty	Bullet EFI	Classic				Conti GT	Remarks
					500	DS	BG	Chrome		
A1	585321/a	Front Wheel complete assy with tyre & tube	1						●	
A2	888272	Front hub sub assy	1						●	
A3	888273	Front Spindle kit	1						●	
A4	888118	Front Wheel bearing & Seal kit	1						●	
A5	888275	Spokes & Nipple kit Front Wheel 18” (Disc) - Continental GT	1						●	
1	586085/a	Hex U Nut M16 X 1.5	1						●	
2	593095/a	Washer	1						●	
3	593062/c	Spacer Disc Side	1						●	
4	560546/b	Hex Flange Bolt M8 X 25	6						●	
5	585211/b	Toner-Front Wheel	1						●	
6	585024/b	Front Disc	1						●	
7	141109/1	Grease Seal,25 X 40 X 7	1						●	
8	150324/a	Deep Groove Ball Bearing 6203 (17 X 40 X12)	2						●	
9	585514/c	Bearing Spacer Assy	1						●	
10	859075	Hub-Front	1						●	
11	585326/b	Spokes Front	36						●	
12	585179/a	Nipple 3.6 mm	36						●	
13	585329/c	Tyre-Front 100/90-18"	1						●	
14	585330/c	Tube -Front 100/90-18"	1						●	
15	585478/a	Rim Front Aluminium(2.5X18")	1						●	
16	585328/b	Rim Tape	1						●	
17	585334/c	Spindle-Front Wheel	1						●	
18	594238/b	Wheel Speed Sensor Assy	1						●	

14 - 10 REAR WHEEL - BULLET EFI & CLASSIC MODELS

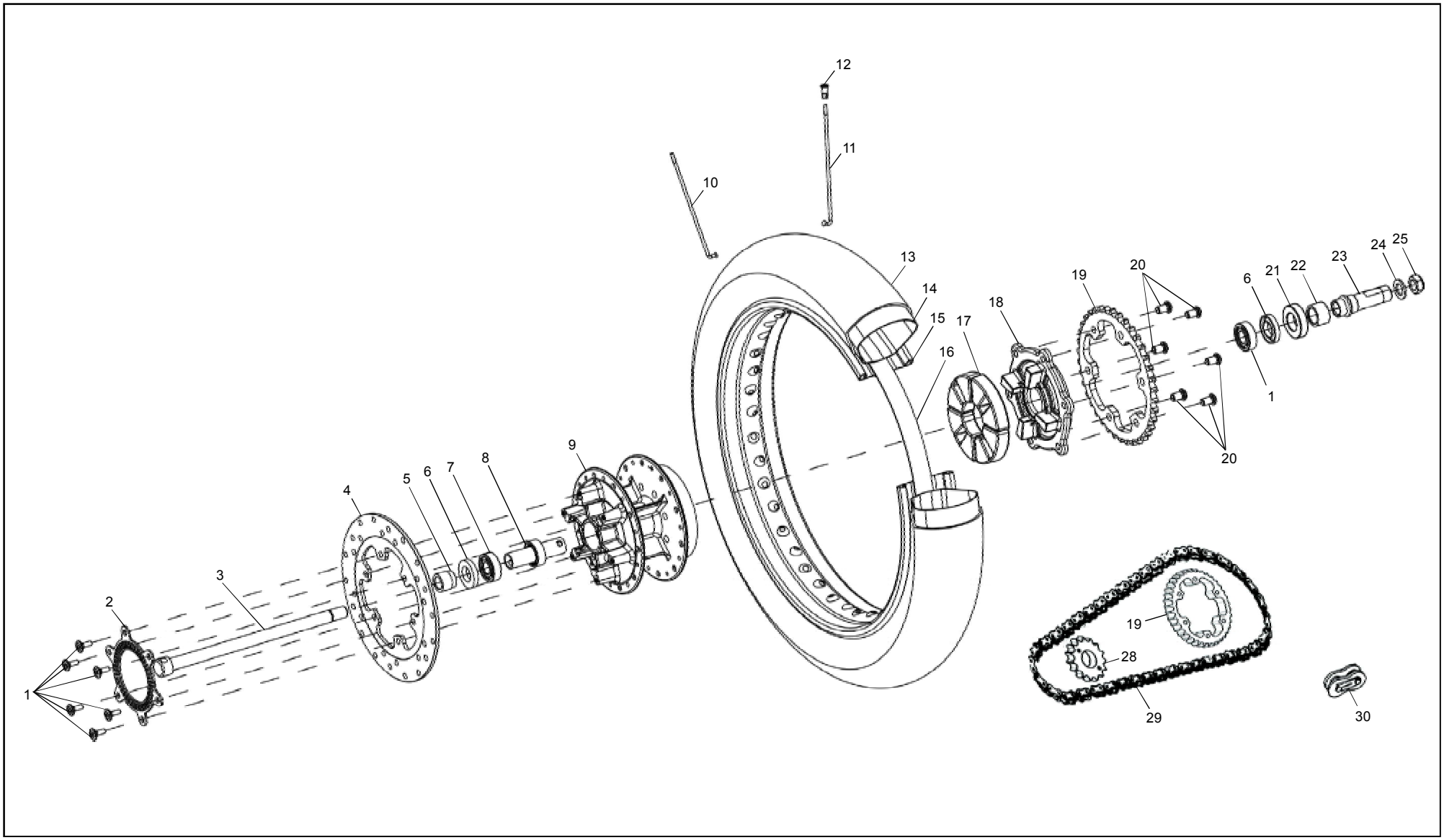

14 - 10 REAR WHEEL - BULLET EFI & CLASSIC MODELS

Key No.	Part Number	Description	Qty	Bullet EFI	Classic				Conti GT	Remarks
					500	DS	BG	Chrome		
A1	1010025/B	Rear Wheel.Assy	1	●	●	●		●		
	1010319/A	Rear Wheel Assy Olive Green	1				●			
A2	888151	Rear Wheel bearing & Seal kit	1	●	●	●	●	●		
1	587605/b	Socket Head Bolt M8 X1.25 X20	6	●	●	●	●	●		
2	585216/b	Toner-Rear Wheel	1	●	●	●	●	●		
3	594088/a	Spindle Long	1	●	●	●	●	●		
4	1010093/c	Rear Disc Plate	1	●	●	●	●	●		
5	594050/c	Spacer-Disc Side	1	●	●	●	●	●		
6	141109/1	Grease Seal,25X40X7	2	●	●	●	●	●		
7	150324/a	Deep Groove Ball Bearing 6203 (17 X 40 X12)	2	●	●	●	●	●		
8	146499/b	Rear Hub Spacer Assy	1	●	●	●	●	●		
9	891061	Rear Hub, Texture Silver	1	●	●	●		●		
	825587	Rear Hub, Olive Green	1				●			
10	585302/b	Spokes Outer Rear	20	●	●	●	●	●		
11	585301/b	Spokes Inner-Rear	20	●	●	●	●	●		
12	143885/a	Brass Nipples	40	●	●	●	●	●		
13	590006/b	Tyre-Rear 110/80 - 18"	1	●	●	●	●	●		
14	591984/a	Tube-Rear 110/80 - 18"	1	●	●	●	●	●		
15	591210/a	Rim Rear	1	●	●	●		●		
15	825316	Wheel Rim Amry Og	1				●			
16	140355/b	Rim Tape	1	●	●	●	●	●		
17	144471/a	Cush Rubber	4	●	●	●	●	●		
18	891062	Adaptor-Rd Sprocket-Texture Silver	1	●	●	●		●		
	825588	Adaptor-Rd Sprocket-Olive Green	1				●			

14 - 10 REAR WHEEL - BULLET EFI & CLASSIC MODELS

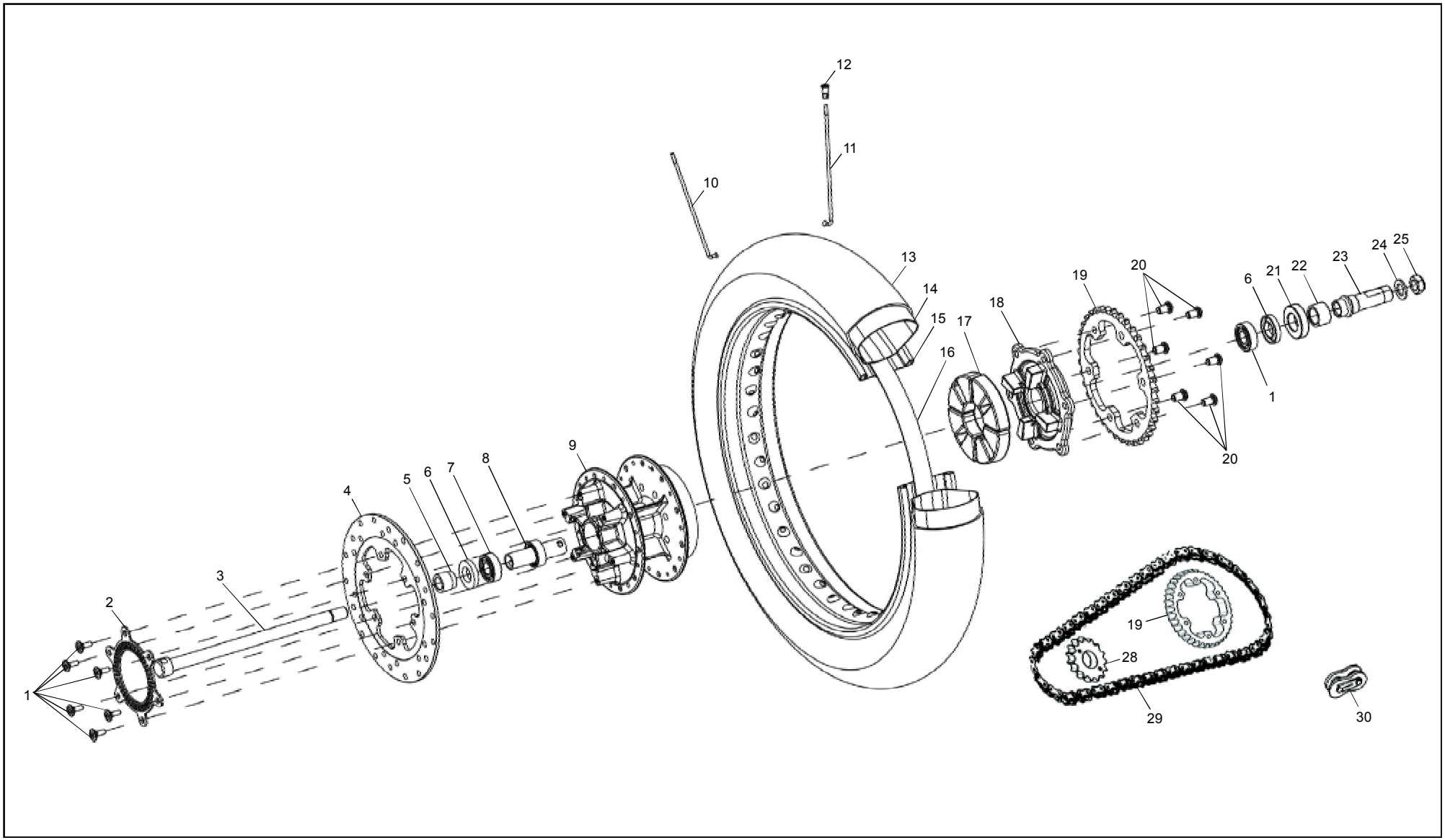

14 - 10 REAR WHEEL - BULLET EFI & CLASSIC MODELS

Key No.	Part Number	Description	Qty	Bullet EFI	Classic				Conti GT	Remarks
					500	DS	BG	Chrome		
19	594048/b	Sprocket-Rear Drive	1	●	●	●	●	●		
20	594851/a	Low Head Socket Cap Screw M10 X 1.5 X 16	6	●	●	●	●	●		
21	145553/b	Bearing	1	●	●	●	●	●		
22	594562/a	Dust Seal-Rd Spracket	1	●	●	●	●	●		
23	594087/a	Spindle Short	1	●	●	●	●	●		
24	594051/a	Spacer-Sprocket Side	1	●	●	●	●	●		
25	586009/a	Hexognal Lock Nut M22X1.5	1	●	●	●	●	●		
26	593095/a	Washer	1	●	●	●	●	●		
27	586085/a	Hex U Nut M16X1.5	1	●	●	●	●	●		
28	571004/f	Final Drive Sprocket 17T	1	●	●	●	●	●		
29	593236/a	Chain Rear (102 Pitches O-ring type)	1	●	●	●	●	●		
30	147864/a	Connecting Link ‘O’ Ring Drive Chain - LGB	1	●	●	●	●	●		

14 - 15 REAR WHEEL - CONTINENTAL GT

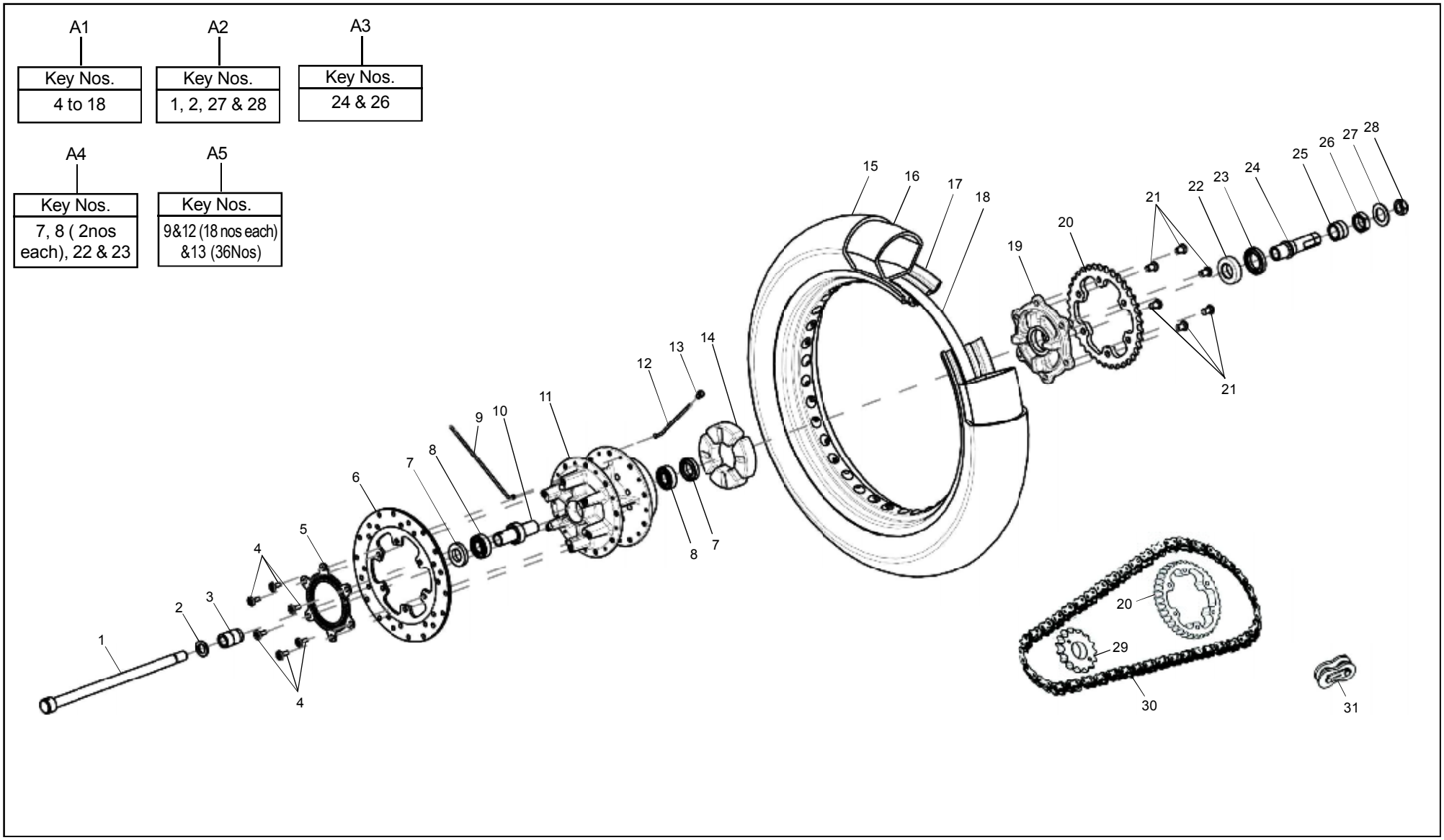

14 - 15 REAR WHEEL - CONTINENTAL GT

Key No.	Part Number	Description	Qty	Bullet EFI	Classic				Conti GT	Remarks
					500	DS	BG	Chrome		
A1	585341/a	Rear Wheel assy	1						●	
	585341/a	Rear Wheel assy	1						●	
A2	888284	Rear Spindle, Washer & Nut kit	1						●	
A3	888283	Short Spindle & Nut kit	1						●	
A4	888151	Rear Wheel bearing & Seal kit	1						●	
A5	888282	Rear Wheel Spokes & Nipple kit 18”	1						●	
1	585316/b	Spindle Long	1						●	
2	593095/a	Washer	1						●	
3	585312/a	Spacer-Disc Side	1						●	
4	587605/b	Hex.Socket Button Head Screrw M6X1 X 14	6						●	
5	585216/b	Toner-Rear Wheel	1						●	
6	585366/a	Rear Disc Plate	1						●	
7	141109/1	Grease Seal,25X40X7	2						●	
8	150324/a	Deep Groove Ball Bearing 6203 (17 X 40 X12)	2						●	
9	585301/b	Spokes Inner-Rear	18						●	
10	146499/a	Bearing Spacer Assy	1						●	
11	585016/b	Rear Hub Assembly	1						●	
12	585302/b	Spokes Outer-Rear	18						●	
13	143885	Brass Nipples	36						●	
14	585309/b	Cushion Rubber	4						●	
15	585305/b	Tyre-Rear 130/70 – 18”	1						●	
16	585304/b	Tube-Rear (130 /80 – 18")	1						●	
17	585300/a	Rim Rear	1						●	
18	585328/a	Rim Tape	1						●	

14 - 15 REAR WHEEL - CONTINENTAL GT

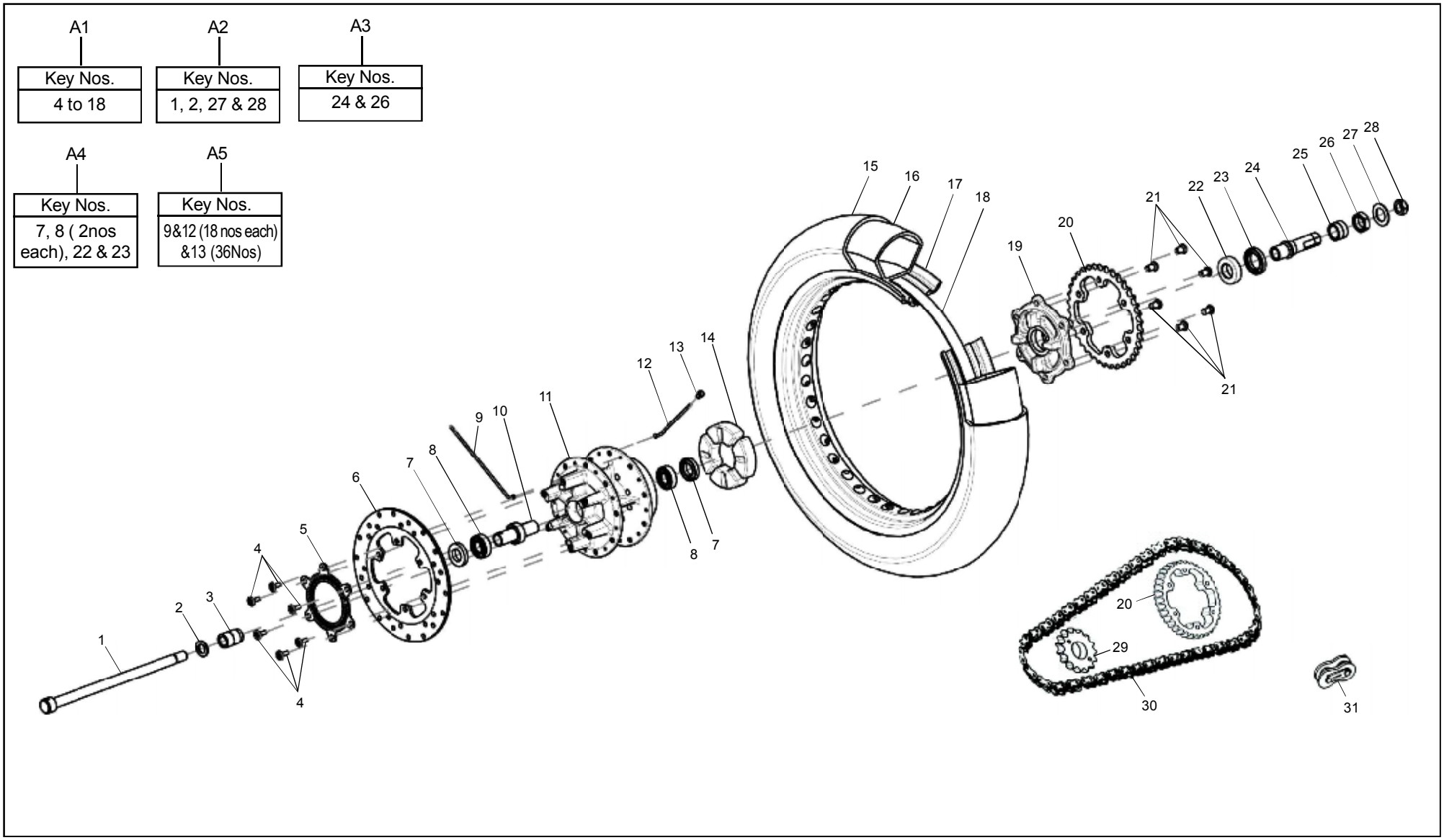

14 - 15 REAR WHEEL - CONTINENTAL GT

Key No.	Part Number	Description	Qty	Bullet EFI	Classic				Conti GT	Remarks
					500	DS	BG	Chrome		
19	859074	Adaptor – RD Sprocket (Metalic Silver)	1						●	
20	585311/b	Sprocket-Rear Drive	1						●	
21	594851/a	Low Head Socket Cap Screw M10 X 1.5 X 16	6						●	
22	145553/b	Bearing 6005 (25 X 47 X12)	1						●	
23	594562/a	Dust Seal-Rd Spracket	1						●	
24	585315/b	Spindle Short	1						●	
25	585313/a	Spacer-Sprocket Side	1						●	
26	586009/a	Hexognal Lock Nut M22X1.5	1						●	
27	585833/a	Washer	1						●	
28	586085/a	Hex U Nut M16X1.5	1						●	
29	571004/f	Final Drive Sprocket 17T	1						●	
30	593235/a	Chain Rear (100 Pitches O-ring type)	1						●	
31	147864/a	Connecting Link ‘O’ Ring Drive Chain - LGB	1						●	

15 - 10 ANTILOCK BRAKE SYSTEM - BULLET EFI & CLASSIC MODELS

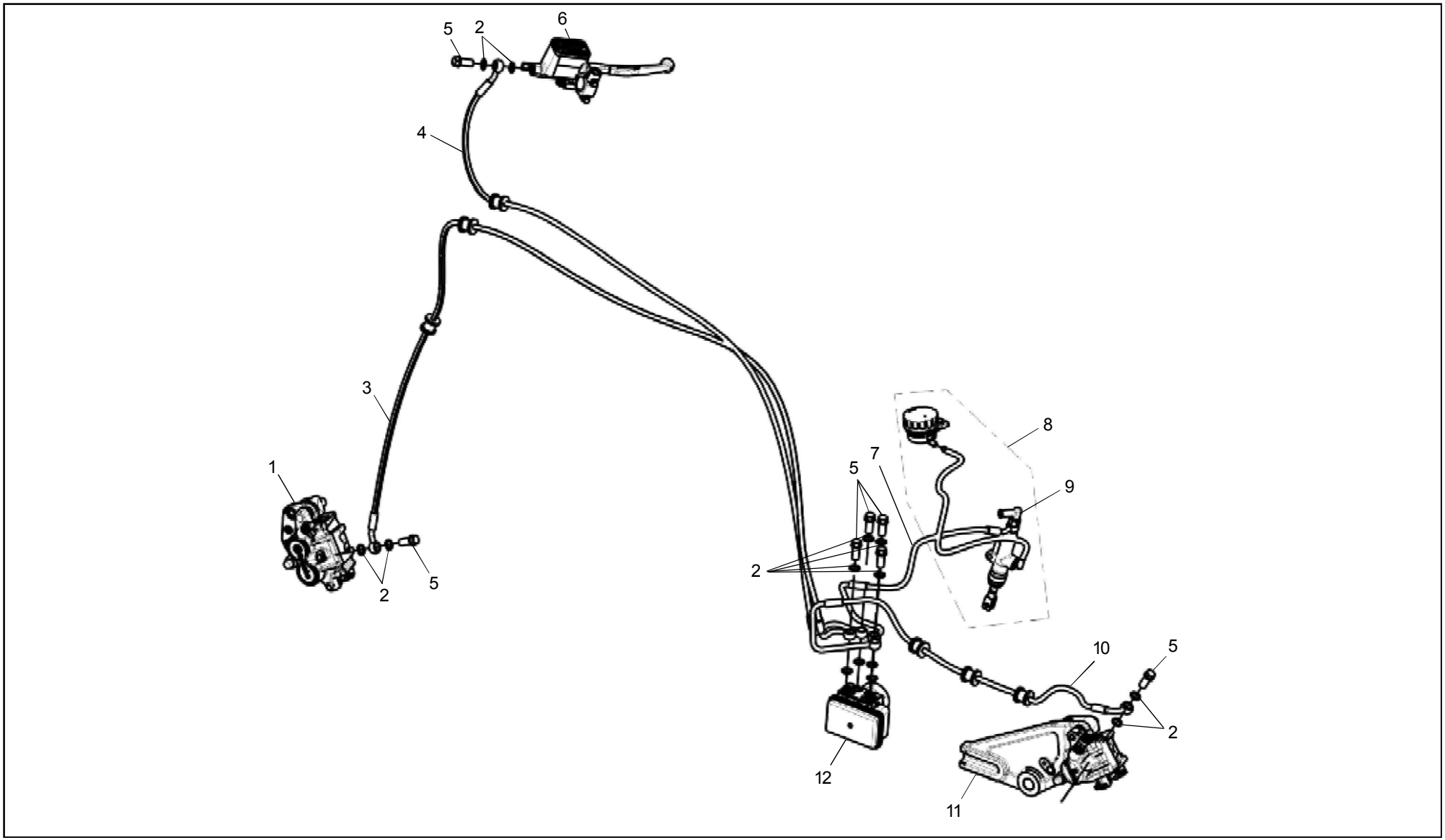

15 - 10 ANTILOCK BRAKE SYSTEM - BULLET EFI & CLASSIC MODELS

Key No.	Part Number	Description	Qty	Bullet EFI	Classic				Conti GT	Remarks
					500	DS	BG	Chrome		
A1	1010032/B	ABS System	1	●	●	●	●	●		
1	147649/a	Front Caliper	1	●	●	●	●	●		
2	594508/a	Copper Washer-Rear Disc	16	●	●	●	●	●		
3	1010034/b	Brake Hose Assy-ABS To Front Caliper	1	●	●	●	●	●		
4	1010033/b	Brake Hose Assy -ABS To Front Master Cylinder	1	●	●	●	●	●		
5	594507/b	Banjo Bolt-Rear Disc(Black)	7	●	●	●	●	●		
6	594631/a	Master Cylinder-Front	1	●	●	●	●	●		
7	1010035/a	Brake Hose Assy-ABS To Rear Master Cylinder	1	●	●	●	●	●		
8	1010255/a	Master Cylinder Assy Comp -Rear	1	●	●	●	●	●		
9	587336/a	Rear Brake Switch	1	●	●	●	●	●		
10	1010036/b	Brake Hose Assy-ABS To Rear Caliper	1	●	●	●	●	●		
11	594055/b	Caliper Assy-Rear	1	●	●	●	●	●		
12	583957/b	ABS Modulator	1	●	●	●	●	●		

15 - 15 ABS MOUNTING TO FRAME - BULLET EFI & CLASSIC MODELS

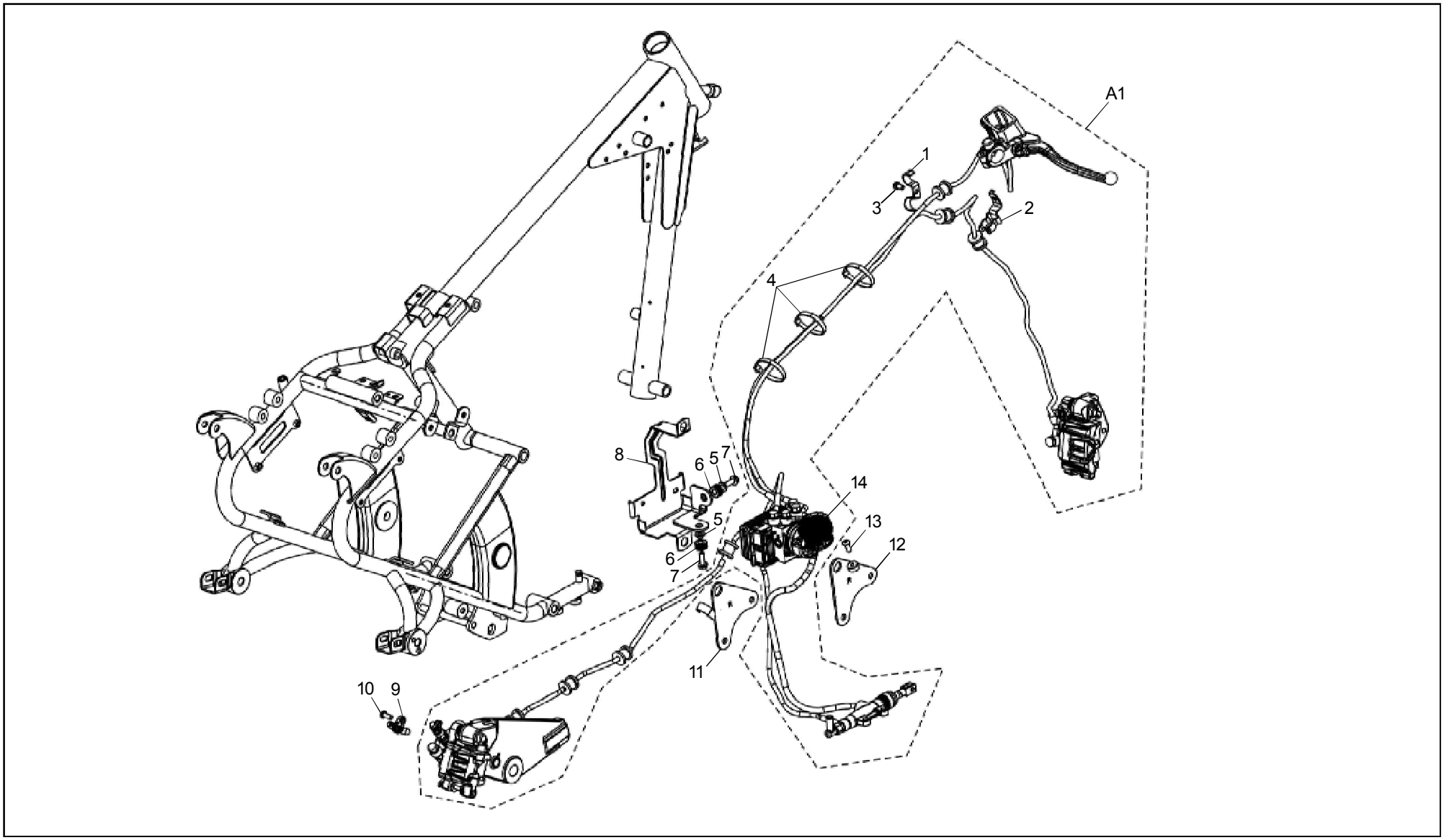

15 - 15 ABS MOUNTING TO FRAME - BULLET EFI & CLASSIC MODELS

Key No.	Part Number	Description	Qty	Bullet EFI	Classic				Conti GT	Remarks
					500	DS	BG	Chrome		
A1	1010032/B	ABS System		●	●	●	●	●		
1	1010183/a	Clamp Brake Hose	1	●	●	●	●	●		
2	1010180/a	Clamp Front Caliper Hose	1	●	●	●	●	●		
3	586048/a	Hex Bolt M6 X 1 X 10	1	●	●	●	●	●		
4	582511/a	Wire Strap	1	●	●	●	●	●		
5	585395/b	Sleeve	2	●	●	●	●	●		
6	585394/b	Rubber Grommet	2	●	●	●	●	●		
7	586042/a	Flanged Hex Bolt M6 X 1 X 20	1	●	●	●	●	●		
8	1010190/B	Bracket Assy - ABS & Cover	1	●						
	866264	Bracket Assy-ABS-Black	1		●			●		
	858075	Bracket Assy-ABS-Sqaurdon Blue	1		●					
	873122	Bracket Assy-ABS-Desert Storm	1			●				
	825602	Bracket Assy-ABS-Olive Green	1				●			
9	585217/b	Wheel Speed Sensor	1	●	●	●	●	●		
10	594046/b	Hex Button Head Screw M6 X 1 X 16	1	●	●	●	●	●		
11	801529	Engine Mounting Plate - Rear LH Black	1	●	●	●	●	●		
12	866260	Engine Mtg Plate - Rear RH Black	1	●	●	●	●	●		
13	594046/b	Hex Button Head Screw M6 X 1 X 16	1	●	●	●	●	●		
14	1010032/a	ABS Modulator	1	●	●	●	●	●		

15 - 20 ANTILOCK BRAKE SYSTEM - CONTINENTAL GT

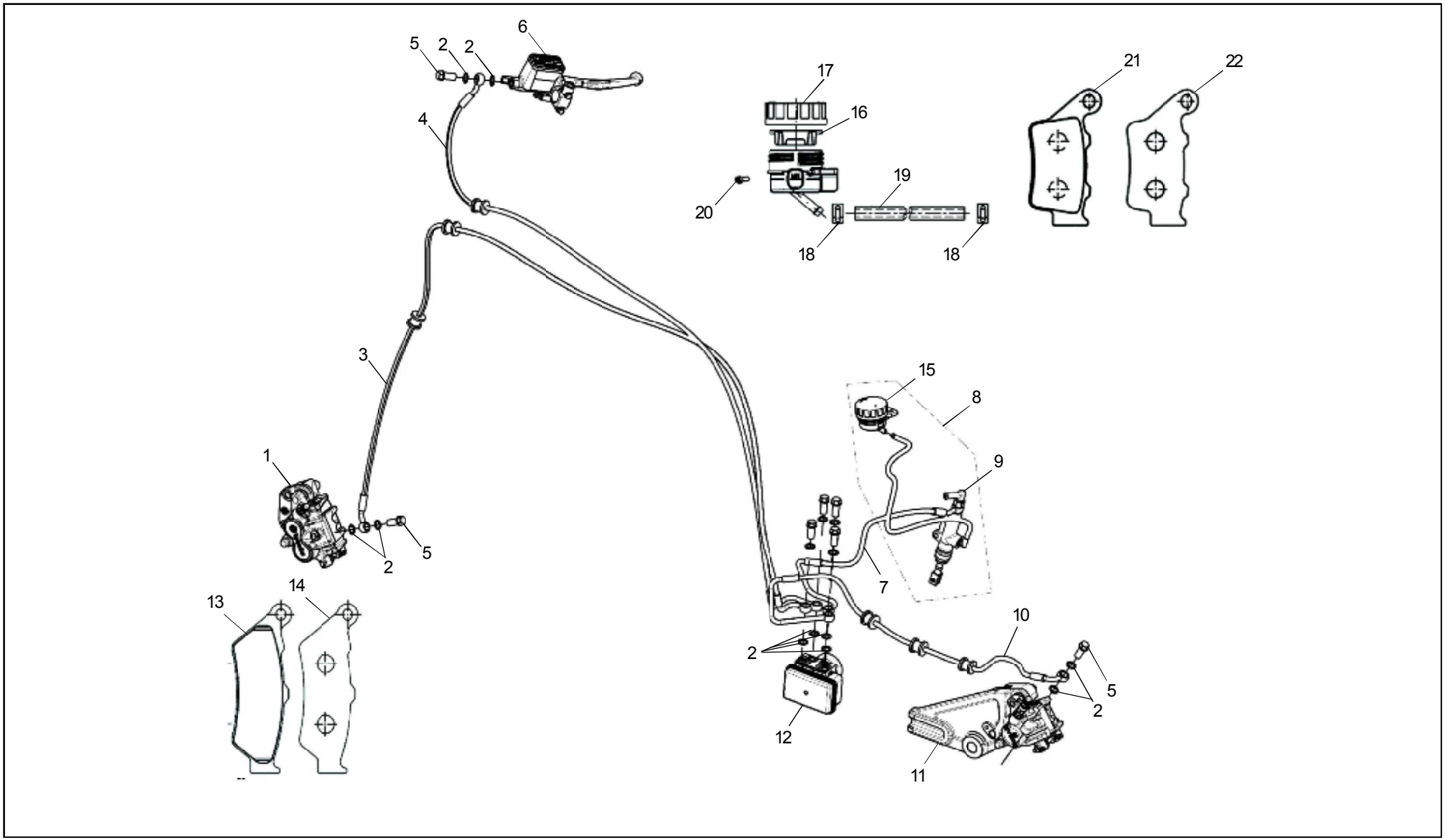

15 - 20 ANTILOCK BRAKE SYSTEM - CONTINENTAL GT

Key No.	Part Number	Description	Qty	Bullet EFI	Classic				Conti GT	Remarks
					500	DS	BG	Chrome		
A1	585287/b	Abs System	1						●	
1	585025/a	Front Caliper	1						●	
2	594508/a	Copper Washer	16						●	
3	585207/c	Brake Hose Assy-Abs To Front Caliper	1						●	
4	585206/c	Brake Hose Assy -Abs To Front Master Cyl	1						●	
5	594507/a	Banjo Bolt	7						●	
6	585027/a	Master Cylinder-Front	1						●	
7	585208/c	Brake Hose Assy-Abs To Rear Master Cyl	1						●	
8	1010255/a	Master Cylinder Assy Comp -Rear	1						●	
9	587336/b	Rear Brake Switch	1						●	
10	585210/c	Brake Hose Assy-Abs To Rear Caliper	1						●	
11	585530/b	Caliper Assy-Rear	1						●	
12	585205/c	Abs Modulator	1						●	
13	585343/a	Brake Pad RH - Front Caliper	1						●	
14	585344/a	Brake Pad LH - Front Caliper	1						●	
15	594057/a	Reservoir (Threaded) - Rear	1						●	
16	594504/a	Diaphragm	1						●	
17	594505/a	Reservoir Cap	1						●	
18	594506/a	Clip (Reservoir)	1						●	
19	585320/a	Reservoir Hose (Rubber)	2						●	
20	594046/a	Hex.Socket Button Head Screrw M6X1	2						●	
21	594429/a	Pad- Rear Disc	1						●	
22	594430/a	Pad-Piston Side - Rear Disc	1						●	

15 - 25 ABS MOUNTING TO FRAME - CONTINENTAL GT

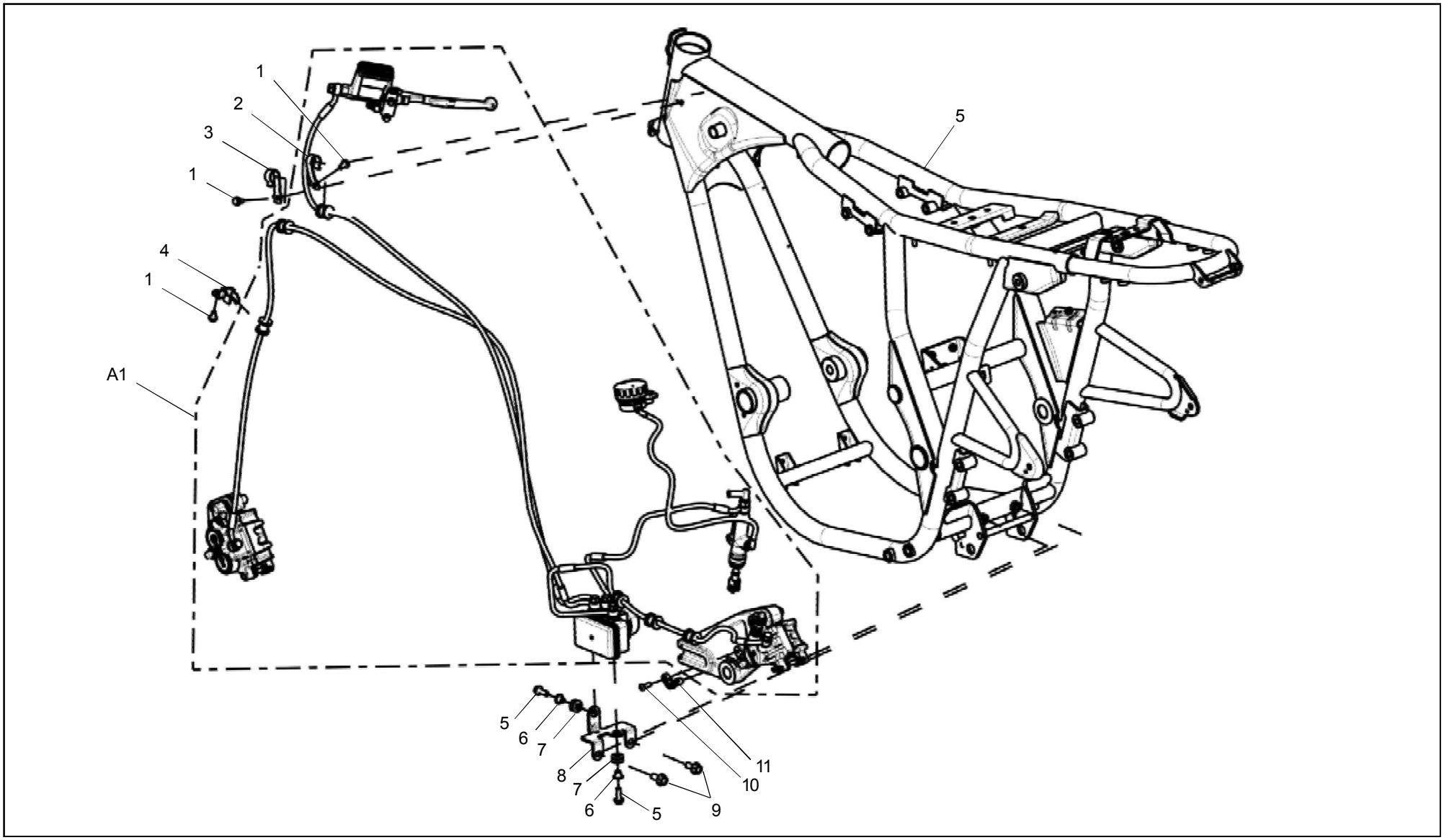

15 - 25 ABS MOUNTING TO FRAME - CONTINENTAL GT

Key No.	Part Number	Description	Qty	Bullet EFI	Classic				Conti GT	Remarks
					500	DS	BG	Chrome		
A1	585287/b	ABS System	1						●	
1	587627/b	Flanged Hexoganal Bolt M6X1 X 10	3						●	
2	1010179/b	Clamp RH - Brake Hose	1						●	
3	1010178/b	Clamp LH - Brake Hose	1						●	
4	1010147/b	Clamp Front - Brake Hose	1						●	
5	586042/a	Flanged Hexoganal Bolt M6X1 X 20	2						●	
6	585395/b	Sleeve	2						●	
7	585394/b	Grommet	2						●	
8	585218/c	Bracket - ABS Modulator	1						●	
9	586111/a	Flanged Hex Bolt M8X20	2						●	
10	594046/b	Hex. Socket Button Head Screw M6X1x16	1						●	
11	585217/b	Wheel Speed Sensor - ABS	1						●	

16-10 SWING ARM ASSEMBLY - BULLET EFI & CLASSIC MODELS

A1

Key Nos.
13,14, (Qty. 2 Nos. 15), (Qty. 4 Nos. 16)

A2

Key Nos.
(Qty. 2 Nos. 2 & 3), 4

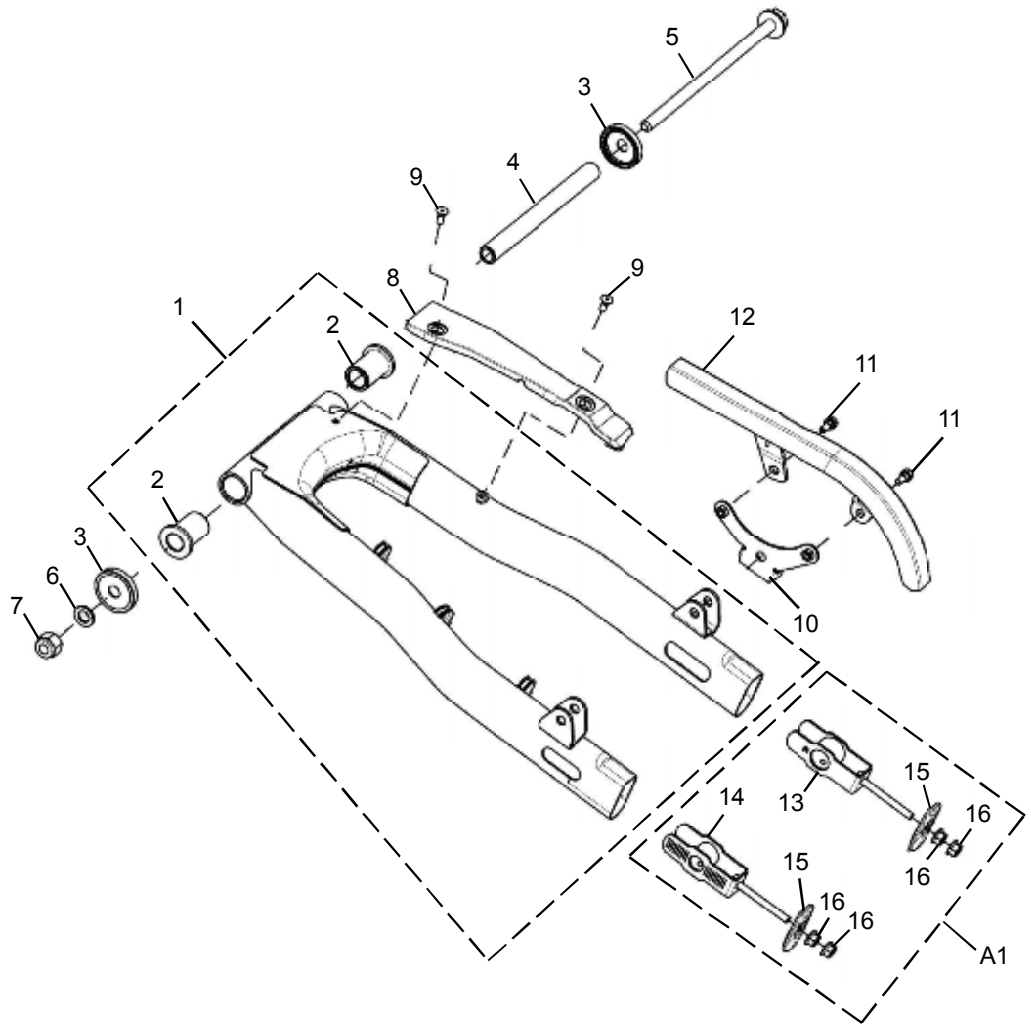

16-10 SWING ARM ASSEMBLY - BULLET EFI & CLASSIC MODELS

Key No.	Part Number	Description	Qty	Bullet EFI	Classic				Conti GT	Remarks
					500	DS	BG	Chrome		
A1	888147	Chain Adjuster Kit (RH & LH)	1	●	●	●	●	●		
A2	888079	Swing Arm End Cap, Bush and Spacer Kit	1	●	●	●	●	●		
1	867034	Swing Arm Sub Assembly Black (Powder Coated)	1	●	●			●		
	858066	Swing Arm Sub Assembly C5 Squadron Blue Euro 4	1		●					
	873112	Swing Arm Sub Assembly C5 Desert Storm Euro 4	1			●				
	825586	Swing Arm Sub Assembly Olive Green Euro 4	1				●			
2	580038/F	Swing Arm Bush - Celcon	2	●	●	●	●	●		
3	580749/D	End Cup	2	●	●	●	●	●		
4	580037/H	Spacer - Chain Stay	1	●	●	●	●	●		
5	580347/D	Hex. Flanged Bolt 1/2 X 16 TPI X 240 - T30	1	●	●	●	●	●		
6	586008/A	Washer - Shake Proof M12	1	●	●	●	●	●		
7	593050/C	Hex. Nylock Nut	1	●	●	●	●	●		
8	594540/A	Chain Pad	1	●	●	●	●	●		
9	594660/A	CSK Screw M6X20	2	●	●	●	●	●		
10	594484/C	Bracket Complete - Chain Guard, Black-Powder Coated	1	●	●	●	●	●		
11	593108/A	Flange Bolt with Collar - M6 X 1	2	●	●	●	●	●		
12	591667/D	Chain Guard	1	●	●	●	●	●		
13	594533/A	Chain Tensioner RH	1	●	●	●	●	●		
14	594216/B	Chain Tensioner LH	1	●	●	●	●	●		
15	594365/A	Plate-Chain Adjuster	2	●	●	●	●	●		
16	586005/A	Flanged Hex. Nut M8 X 1.25	4	●	●	●	●	●		

16 - 15 SWING ARM - CONTINENTAL GT

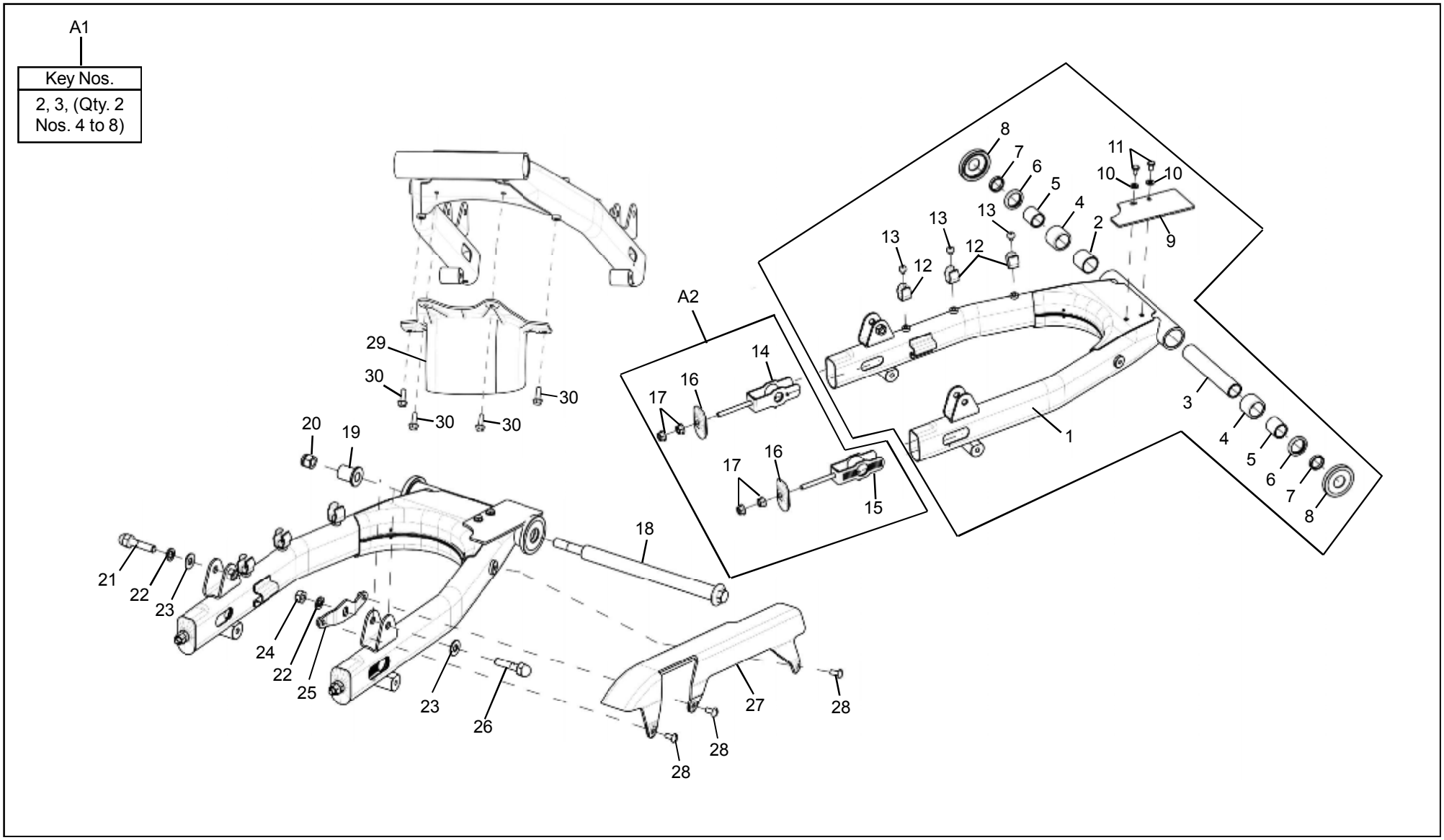

16 - 15 SWING ARM - CONTINENTAL GT

Key No.	Part Number	Description	Qty	Bullet EFI	Classic				Conti GT	Remarks
					500	DS	BG	Chrome		
A1	888277	Swing Arm End Cap, Bearing, Oil Seal & Spacer Kit	1						●	
A2	888147	Chain Adjuster Kit (RH and LH)	1						●	
1	585047/k	Swing Arm Sub Assembly	1						●	
2	585369/A	Nylon Bush - Swing Arm	1						●	
3	585640/B	Inner Spacer - Swing Arm	1						●	
4	585643/A	Needle Bearing (33 X 252 X 25)	2						●	
5	585644/A	Inner Race - Needle Bearing (IR20X25X26)	2						●	
6	585751/A	Oil Seal - Swing Arm	2						●	
7	585753/A	Spacer - Oil Seal Swing Arm	2						●	
8	585645/B	End Cap RH - Swing Arm	2						●	
9	585209/B	Rear Chain - Pad	1						●	
10	586032/A	Washer	2						●	
11	142274	Hex Scew M6 X 16	2						●	
12	594817/A	Clip - Rear Disc Hose	3						●	
13	147896/A	Philips Pan Head Screw M6X6	3						●	
14	594216/B	Chain Tensioner Comp. - LH	1						●	
15	594533/A	Chain Tensioner Comp. - RH	1						●	
16	594365/A	Plate - Chain Adjuster	2						●	
17	586005/A	Flanged Hex. Nut M8X1.25	4						●	
18	585641/A	Flanged Hex. Bolt	1						●	
19	585683/A	Spacer - Swing Arm	1						●	
20	593024/D	Hex. Nut with Nylock M12	1						●	
21	585829/A	Domed Bolt - 3/8"X40	1						●	
22	593109/A	Spring Washer - 3/8”	2						●	

16 - 15 SWING ARM - CONTINENTAL GT

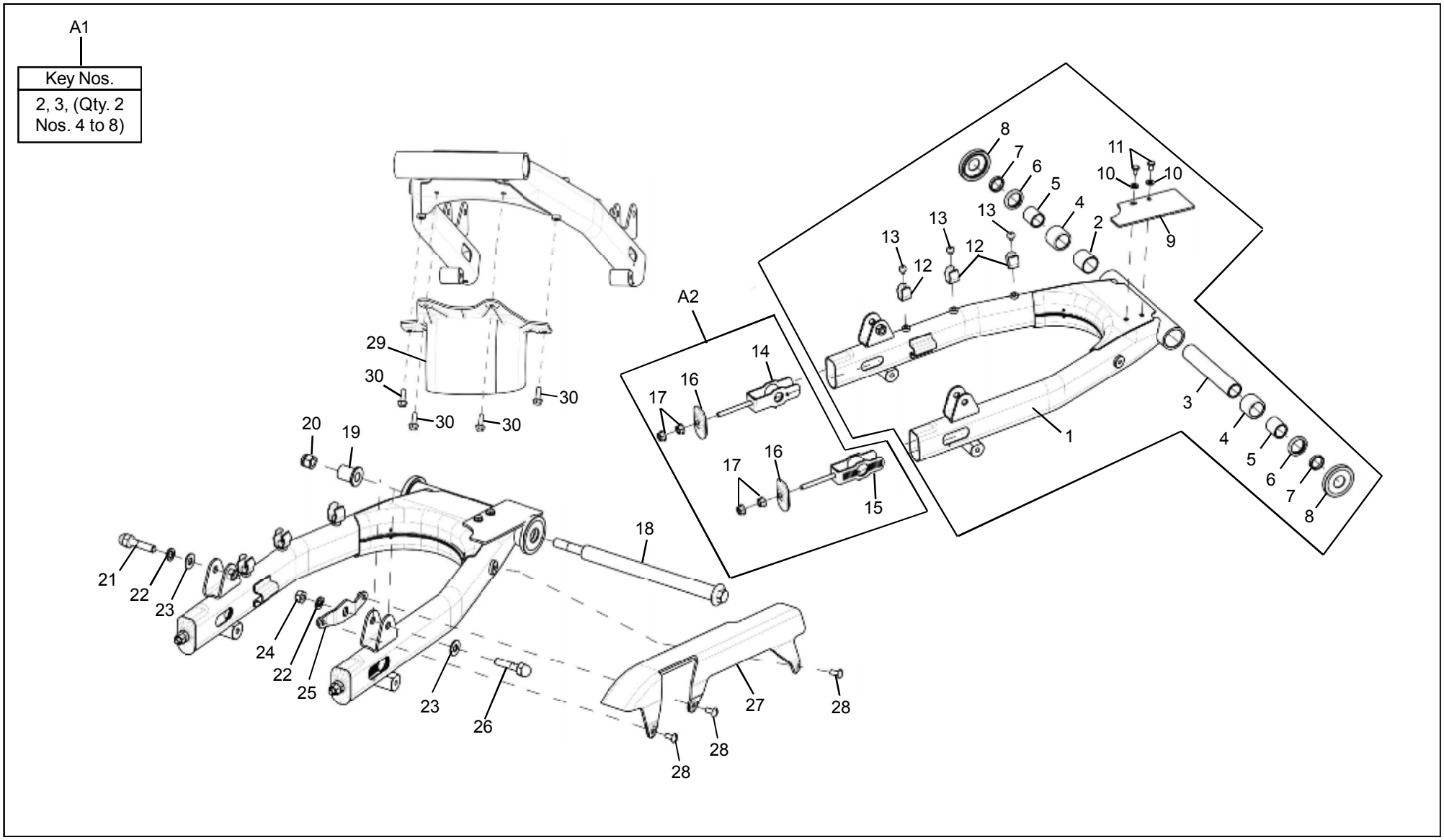

16 - 15 SWING ARM - CONTINENTAL GT

Key No.	Part Number	Description	Qty	Bullet EFI	Classic				Conti GT	Remarks
					500	DS	BG	Chrome		
23	593046/A	Plain Washer (M10)	2						●	
24	594493/B	Hex. Nut 3/8” BSF	1						●	
25	585678/A	Bracket - Plastic Chain Guard	1						●	
26	170399/A	Hex. Bolt 3/8” X 45	1						●	
27	585677/A	Chain Guard - Plastic	1						●	
28	593005/A	Slotted Head Screw M6 X 13	3						●	
29	585221/b	Cover - ABS Modulator	1						●	
30	586042/a	Flanged Hexagonal Bolt M6 X 1 X 20	4						●	

16- 20 REAR SHOCKABSORBERS

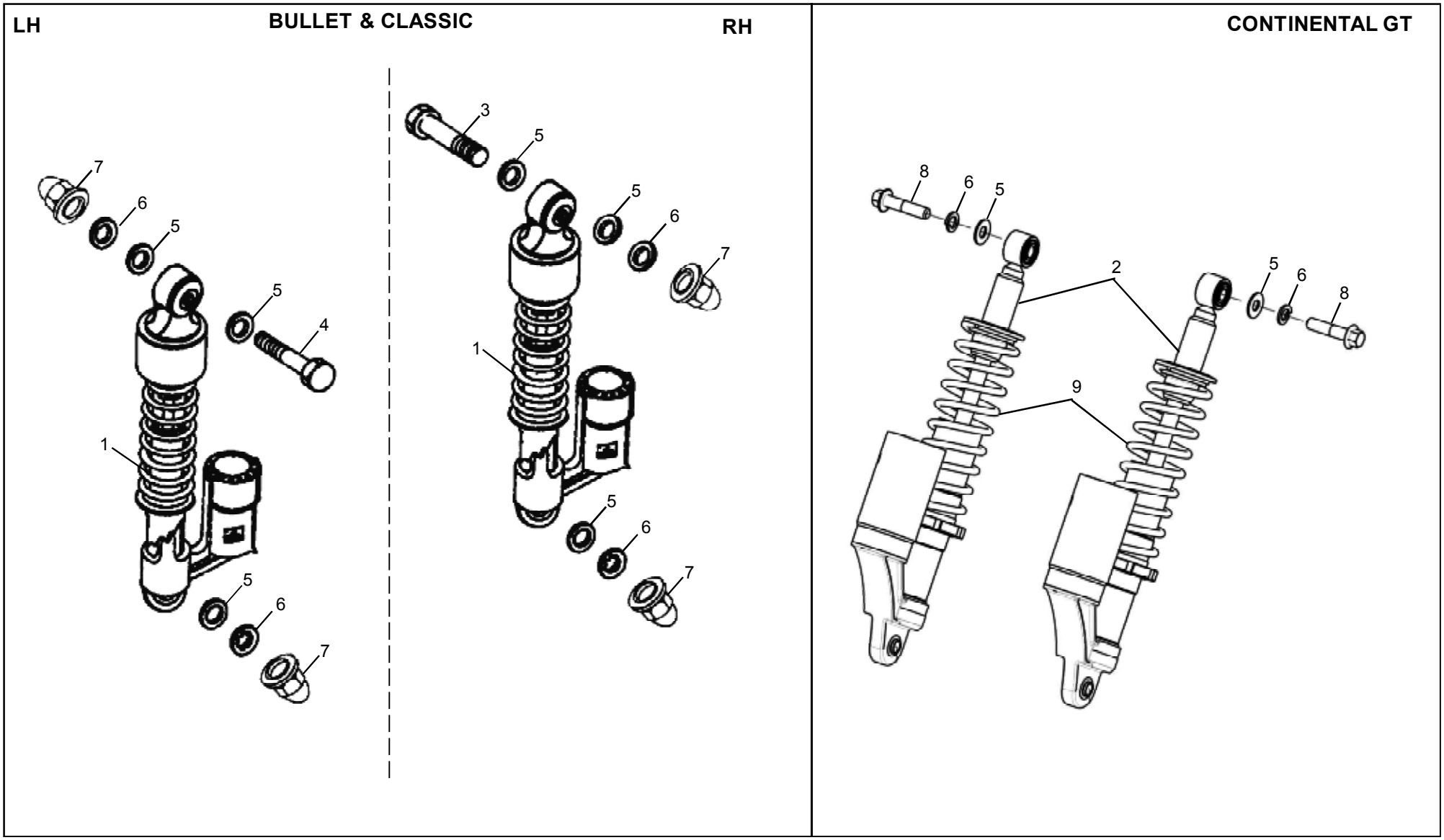

16 - 20 REAR SHOCKABSORBERS

Key No.	Part Number	Description	Qty	Bullet EFI	Classic				Conti GT	Remarks
					500	DS	BG	Chrome		
1	146347/e	Shock Absorber - Chrome Plated	2	●	●	●	●	●		
2	585083/A	Shock Absorber	2						●	
3	593110/b	Hex Bolt - 3/8"X45 (For RH Side Only)	1	●	●	●	●	●		
4	593113/b	Hex Bolt - 3/8" BSF x 2" (For LH Side Only)	1	●	●	●	●	●		
5	593046/a	Plain Washer (M10)	6	●	●	●	●	●		
	593046/a	Plain Washer (M10)	2						●	
6	593109/a	Single Coil Spring Lock Washer	4	●	●	●	●	●	●	
7	170352/1	Domed Nut	4	●	●	●	●	●		
8	585480/A	Flanged Hex. Bolt M10 x 44	2						●	
9	585818/A	Spring - Shock Absorber	2						●	

17 - 10 REAR MUDGUARD ASSEMBLY - BULLET EFI MODELS

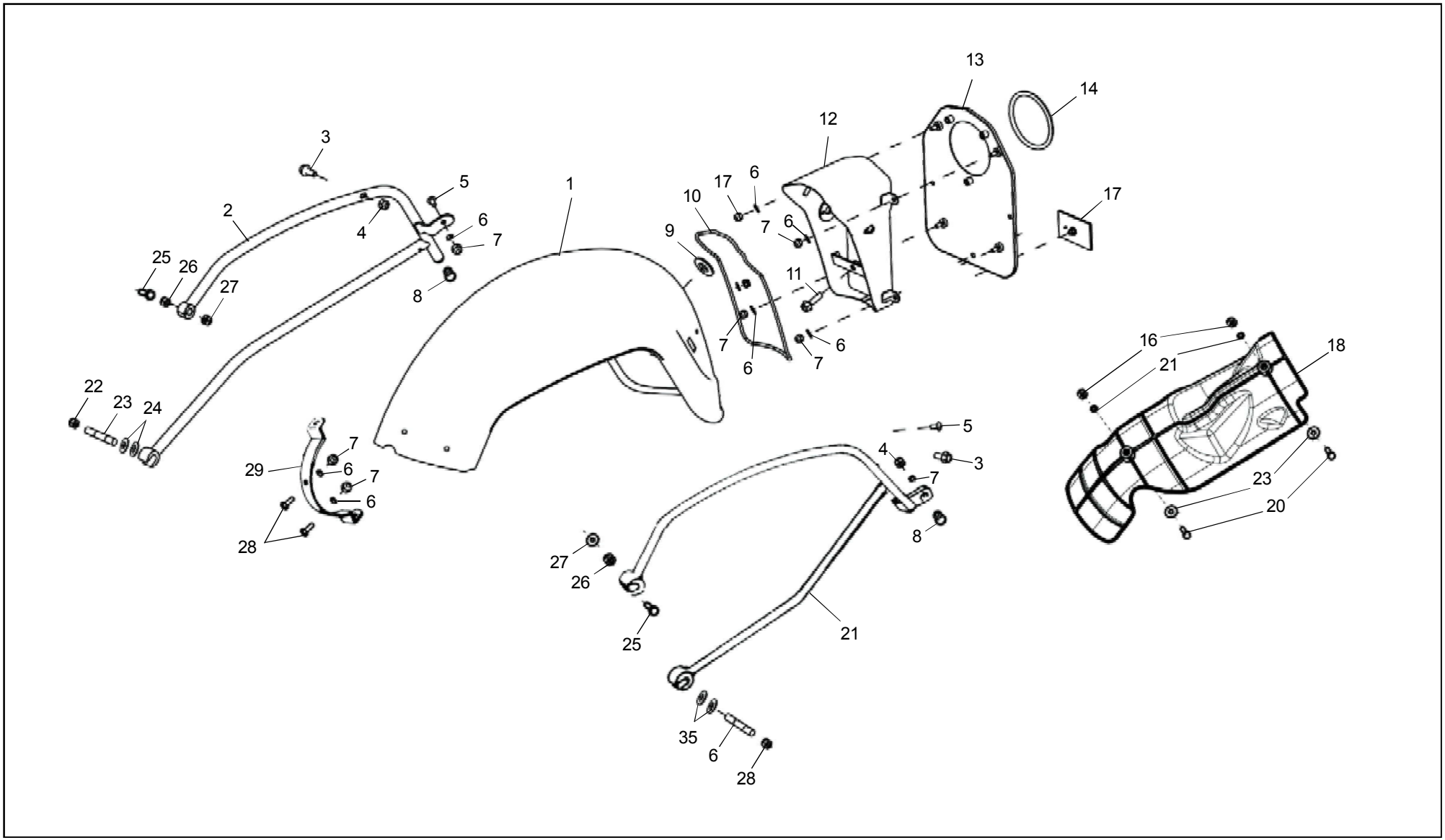

17 - 10 REAR MUDGUARD ASSEMBLY - BULLET EFI MODELS

Key No.	Part Number	Description	Qty	Bullet EFI	Classic				Conti GT	Remarks
					500	DS	BG	Chrome		
1	866133	Rear Mudguard With Sticker Std BVI	1	●						
	806104	Rear Mudguard With Sticker Marsh Grey BVI	1	●						
	880027	Rear Mudguard With Sticker Forest Green BVI	1	●						
2	866180	Mudguard Carrier RH Mod Black	1	●						
3	586002/A	Flanged Hex. Bolt M8 X 20	2	●						For rear seat mounting
4	586004/A	Hex. Nut With Nylon Insert M8 X 9.5	2	●						For rear seat mounting
5	145882/A	Crossed Raised Pan Head Screw M6 X 14	2	●						
6	586032/A	Plain Washer M6	10	●						
7	586021/A	Hex. Nyloc Nut M6	9	●						
8	592030/A	Plug - Carrier End	2	●						
9	170242/A	Grommet	1	●						
10	591023/A	Beading - Rear Number Plate	1	●						
11	586003/A	Hex. Bolt, M8 X 30	1	●						
12	866084	Number Plate Holder Complete	1	●						
13	866083	Tail Lamp Bracket Complete	1	●						
14	591099/A	Beading	1	●						
15	143747	Reflector	1	●						
16	586029/A	Hex Nut M6X1	2	●						
17	140129	Lock Washer Internal Teeth M6	8	●						
18	1010063/B	Piece Mudguard	1	●						
19	586035/A	Washer Plain M6	2	●						
20	140144	Hex. Bolt M6 X 35	2	●						
21	866179	Mudguard Carrier LH Mod Black	1	●						
22	110353/4	Faced Hex. Nut 1/2” CEI	2	●						

17 - 10 REAR MUDGUARD ASSEMBLY - BULLET EFI MODELS

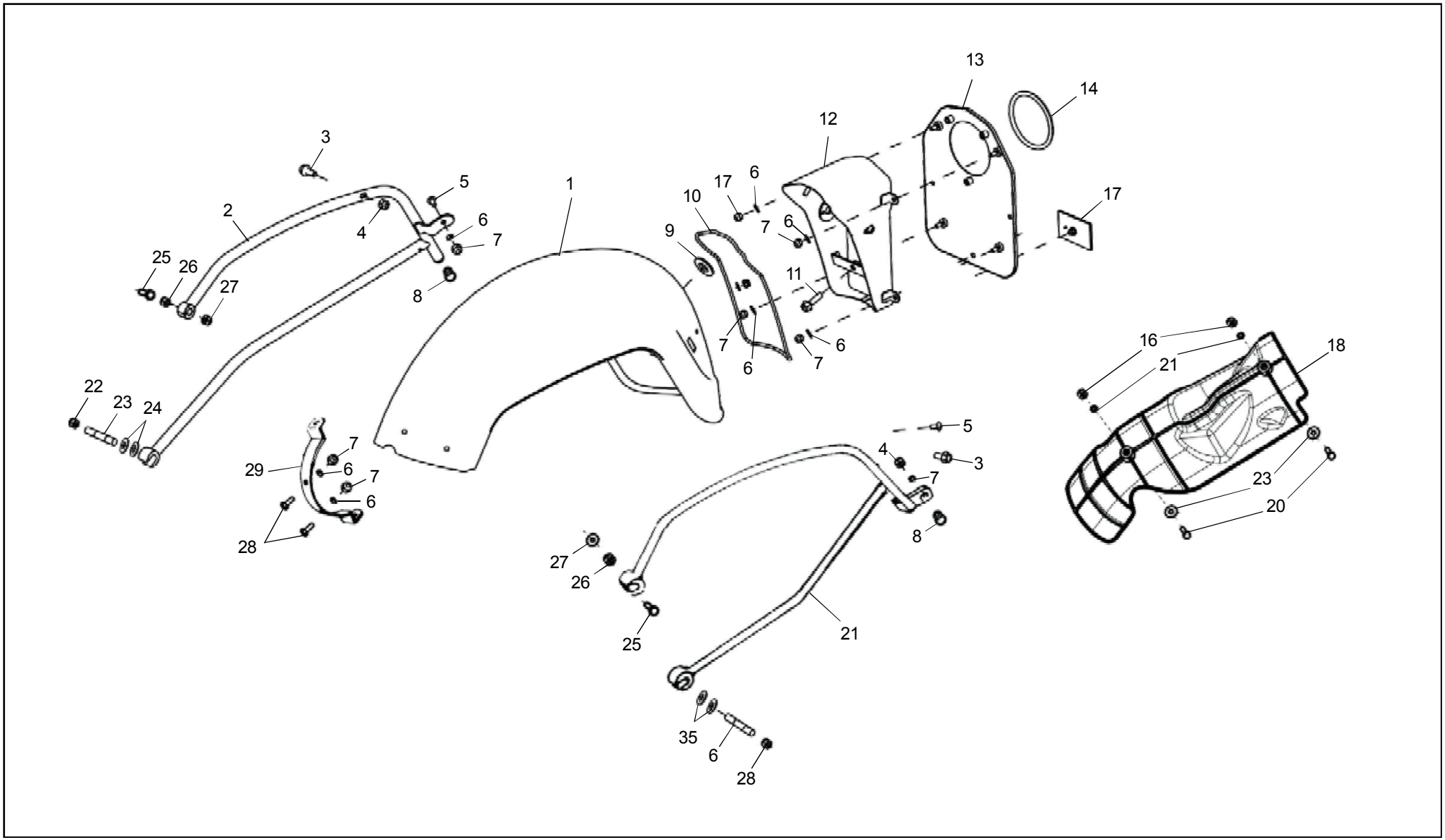

17 - 10 REAR MUDGUARD ASSEMBLY - BULLET EFI MODELS

Key No.	Part Number	Description	Qty	Bullet EFI	Classic				Conti GT	Remarks
					500	DS	BG	Chrome		
23	145543/B	Rear Mudguard Carrier Stud Bottom	2	●						
24	586008/A	Plain Washer M12	4	●						
25	590797/a	Flanged Hex Bolt M10 X 1.25 X 50	2	●						
26	586033/a	Plain Washer M10	2	●						
27	594833/A	Washer Faced Nut M10 (Metric)	2	●						
28	593005/A	Screw M6 X 15	2	●						
29	867059	Bridge Plate	1	●						

17 - 15 REAR MUDGUARD ASSEMBLY - CLASSIC MODELS

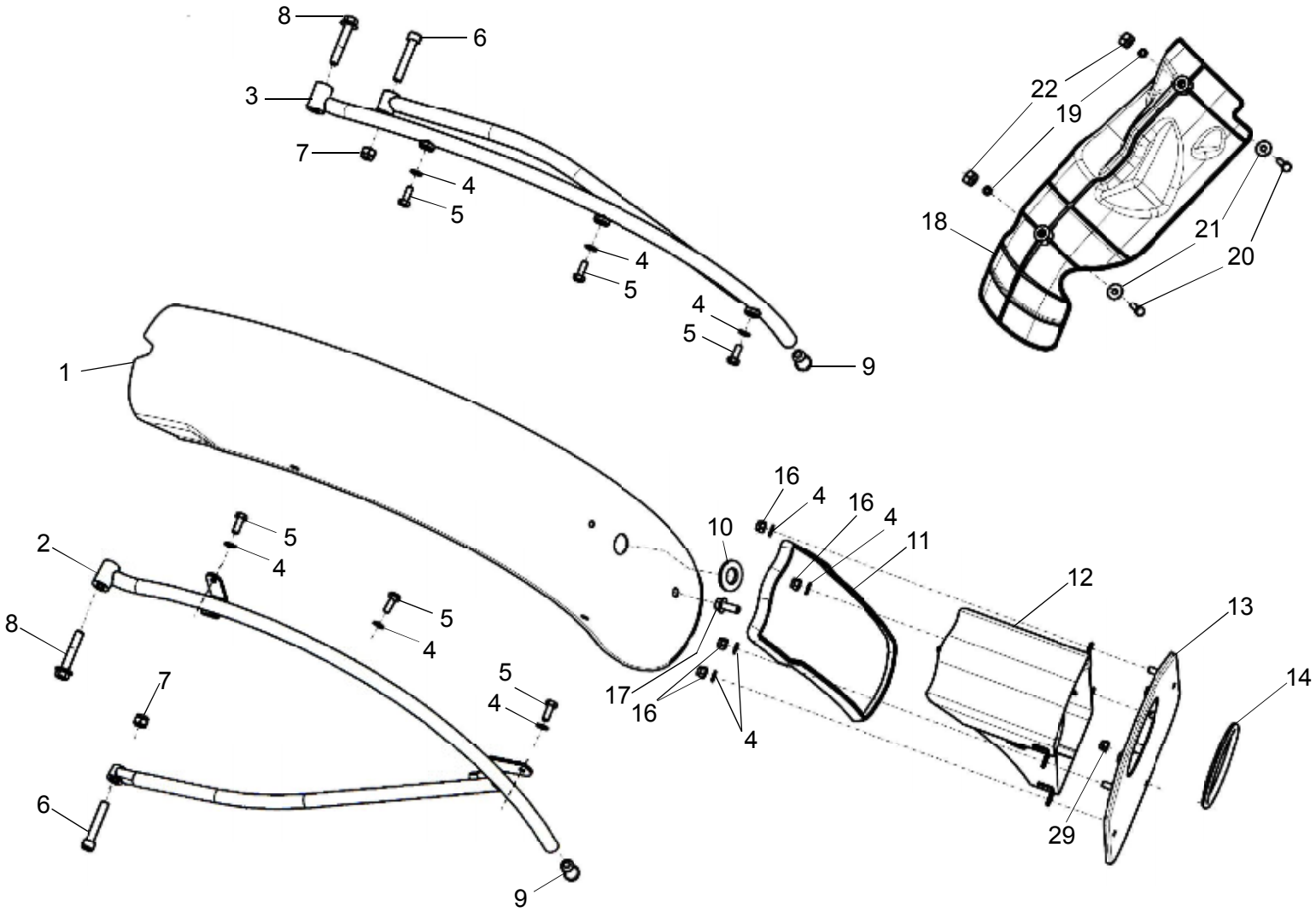

17 - 15 REAR MUDGUARD ASSEMBLY - CLASSIC MODELS

Key No.	Part Number	Description	Qty	Bullet EFI	Classic				Conti GT	Remarks
					500	DS	BG	Chrome		
1	866148	Rear Mud.Comp. W/Stick-Cl. Black BVI	1		●					
	858027	Rear Mud.Comp.W/Sticker Cl.Sq.Blue BVI	1		●					
	881022	Rear Mud.Comp. W/Stick-Cl. Tan BVI	1		●					
	818018	Rear Mud.Comp.W/Sticker Cl.Logoon BVI	1		●					
	873084	Rear Mud.Comp.W/Sticker Cl. D.Storm BVI	1			●				
	825539	Rear Mud.Comp.W/Sticker -Cl Og BVI	1				●			
	590551	Rear Mudguard Comp W/Stick(Chrome/Black)	1					●		
	806109	Rear Mud.Comp W/Stick (Chrome/A.Grey)BVI	1					●		
	880043	Rear Mud.Comp W/Stick(Chrome/F.Green)BVI	1					●		
2	866095	Mudguard Carrier Assy LH - C5 Black	1		●			●		
	858042	Mud. Carrier Assy LH - C5 Squadron Blue	1		●					
	873067	Mud. Carrier Assy LH - C5 Desert Storm	1			●				
	825510	Mudguard Carrier Assy LH-C5 Olive Green	1				●			
3	866094	Mudguard Carrier Assy RH Classic Black	1		●			●		
	858029	Mud.Carrier Assy RH Classic Sq.Blue	1		●					
	873066	Mud.Carrier Assy RH Classic Desert Storm	1			●				
	825509	Mud. Carrier Assy RH Classic Olive Green	1				●			
4	586032/A	Plain Washer M6	6		●	●	●	●		
5	142274	Hex. Screw M6 X 1 X 16	6		●	●	●	●		
6	586023/A	Hex. Socket Head Screw M8 X 40	2		●	●	●	●		
7	586004/A	Hex. Nylock Nut M8 X 9.5	2		●	●	●	●		
8	586022/A	Flanged Hex. Bolt M8 X 1.25 X 45	2		●	●	●	●		
	593033/A	Dome Cap Bolt M8 X 45 (Special)	2		●	●	●	●		
9	592030/A	Plug Carrier End	2		●	●	●	●		

17 - 15 REAR MUDGUARD ASSEMBLY - CLASSIC MODELS

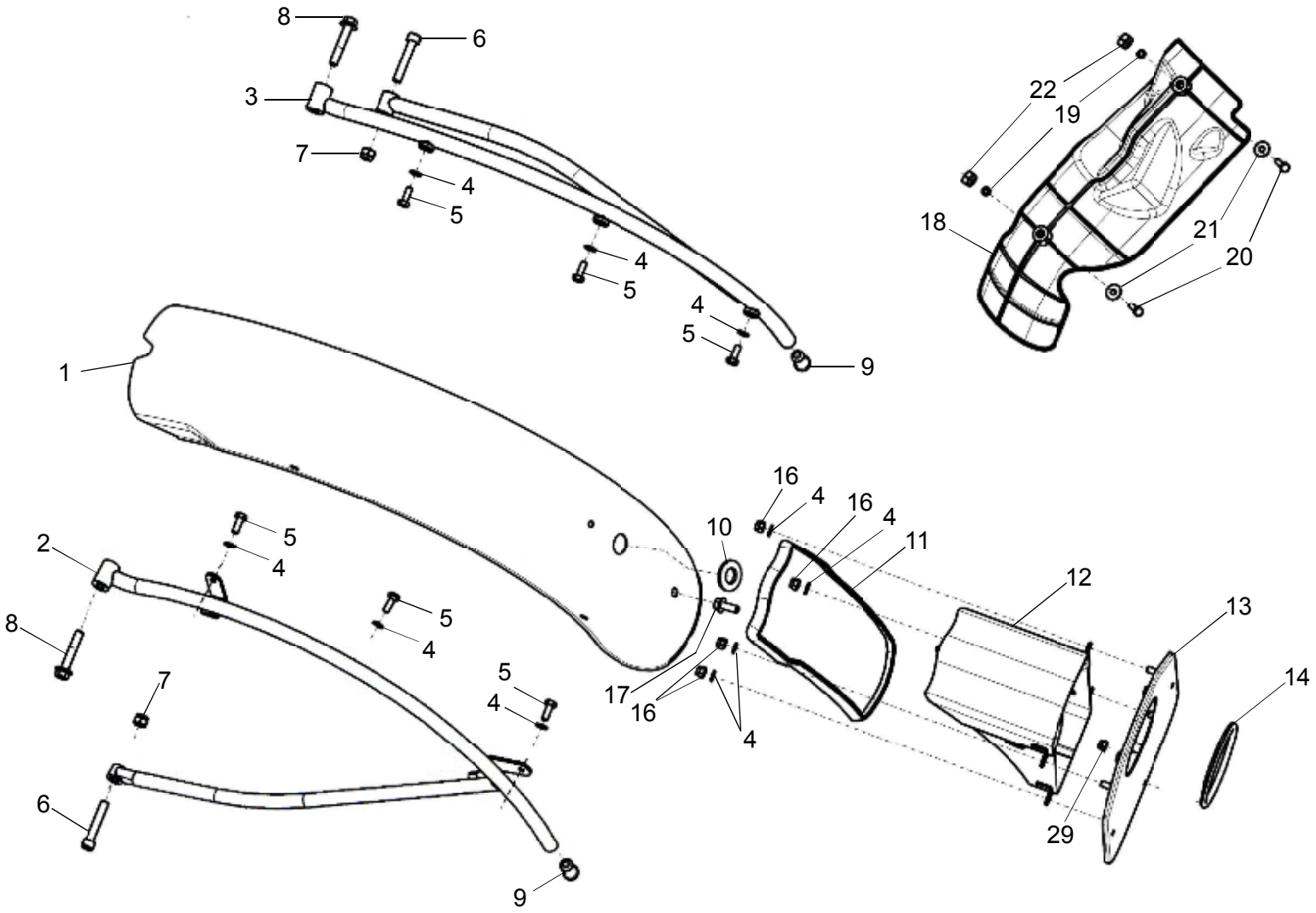

17 - 15 REAR MUDGUARD ASSEMBLY - CLASSIC MODELS

Key No.	Part Number	Description	Qty	Bullet EFI	Classic				Conti GT	Remarks
					500	DS	BG	Chrome		
10	170242/A	Grommet	1		●	●	●	●		
11	591023/A	Beading	1		●	●	●	●		
12	866083	Number Plate Holder Comp Black	1		●	●		●		
	825506	Number Plate Holder Comp Olive Green	1				●			
13	866084	Tail Lamp Bkt Comp Black Mod	1		●	●		●		
	825504	Tail Lamp Bkt Comp Olive Green Mod	1				●			
14	591099/A	Beading	1		●	●	●	●		
15	143747	Reflector Assembly	1		●	●	●	●		
16	586021/A	Hexagonal Nut M6 X 1 X 7	4		●	●	●	●		
17	586003/A	Flanged Hex. Bolt M8 X 30	1		●	●	●	●		
18	1010063/B	Piece Mudguard	1		●	●	●	●		
19	140129	Lock Washer,Internal Teeth	2		●	●	●	●		
20	141044	Hex Bolt, M6 X 35	2		●	●	●	●		
21	586035/A	Washer Plain	2		●	●	●	●		
22	586029/A	Hex. Nut M6	2		●	●	●	●		

17 - 20 REAR MUDGUARD ASSEMBLY - CONTINENTAL GT

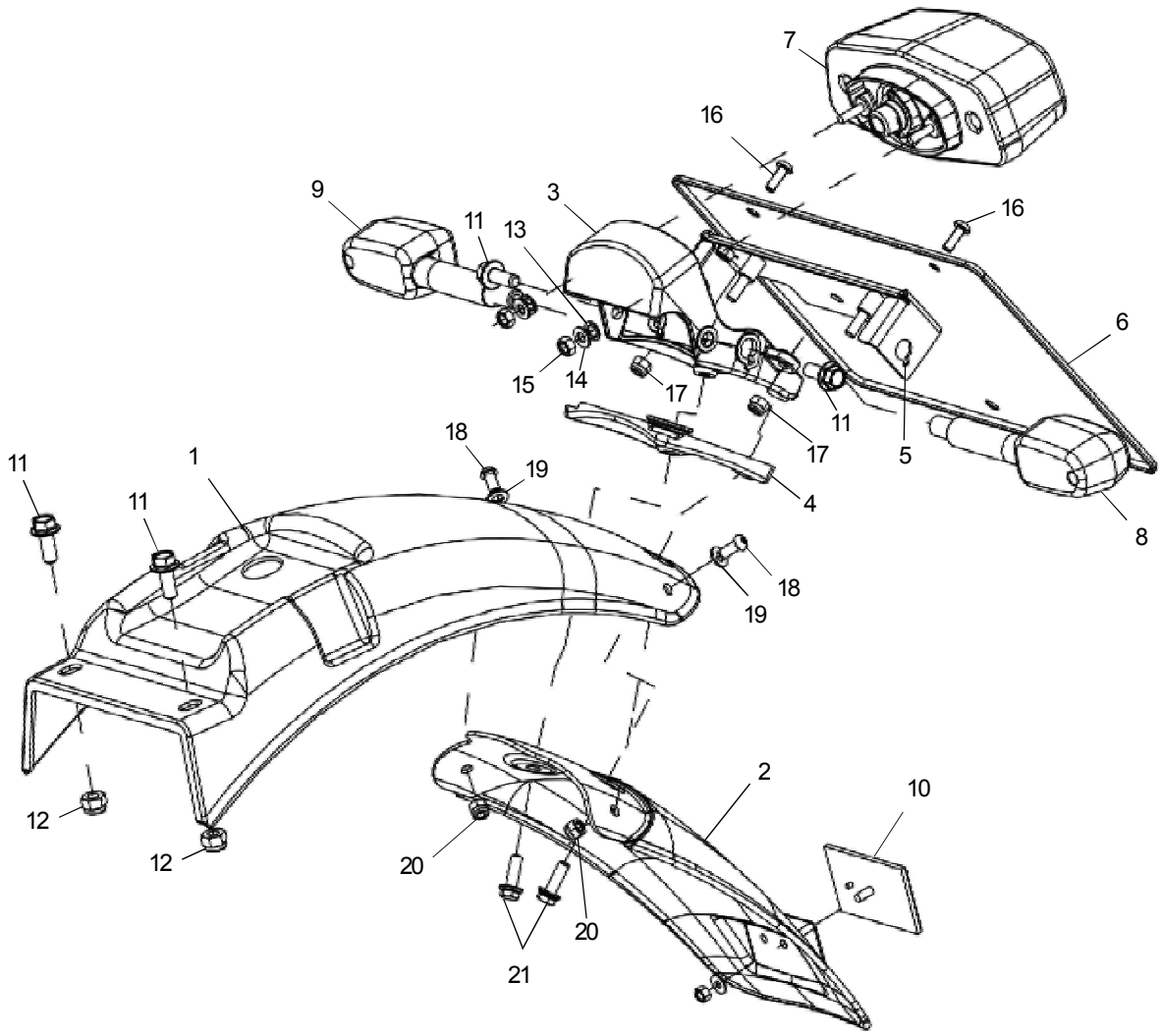

17 - 20 REAR MUDGUARD ASSEMBLY - CONTINENTAL GT

Key No.	Part Number	Description	Qty	Bullet EFI	Classic				Conti GT	Remarks
					500	DS	BG	Chro me		
1	585084/b	Rear Mudguard	1						●	
2	585557/b	Mudflap-Rear	1						●	
3	585087/b	Tail Lamp Bkt Comp	1						●	
4	585374/b	Rubber Pad-Tail Lamp	1						●	
5	585702/a	Number Plate Mtg Bracket – Rear Plate (Export)	1						●	
6	585811/a	Number Plate – Rear Export	1						●	
7	585977/a	Tail Lamp	1						●	
8	585700/c	Trafficator Assy With Bulb-Rear LH	1						●	
9	585701/c	Trafficator Assy With Bulb-Rear RH	1						●	
10	143275/b	Reflector	1						●	
11	586002/a	Flanged Hex.Bolt, M8 X 1 X 20	4						●	
12	586004/a	Hex Nut With Nylon Insert, M8	2						●	
13	586031/A	Lock Washer, M6	2						●	
14	586032/a	Washer	2						●	
15	586029/A	Hex.Nut M6	2						●	
16	594046/A	Hex.Socket Button Head Screrw M6 X 16	2						●	
17	586021/A	Hex.Nut With Nylon Insert M6	2						●	
18	145882/A	Cross Recessed Pan Head Screw M6X 4	2						●	
19	141061/1	Punched Washer M6	2						●	
20	586021/a	Hex.Nut With Nylon Insert M6	2						●	
21	586042/a	Flange Hex Bolt M6 X 20	2						●	

18 - 10 CENTER & SIDE STANDS

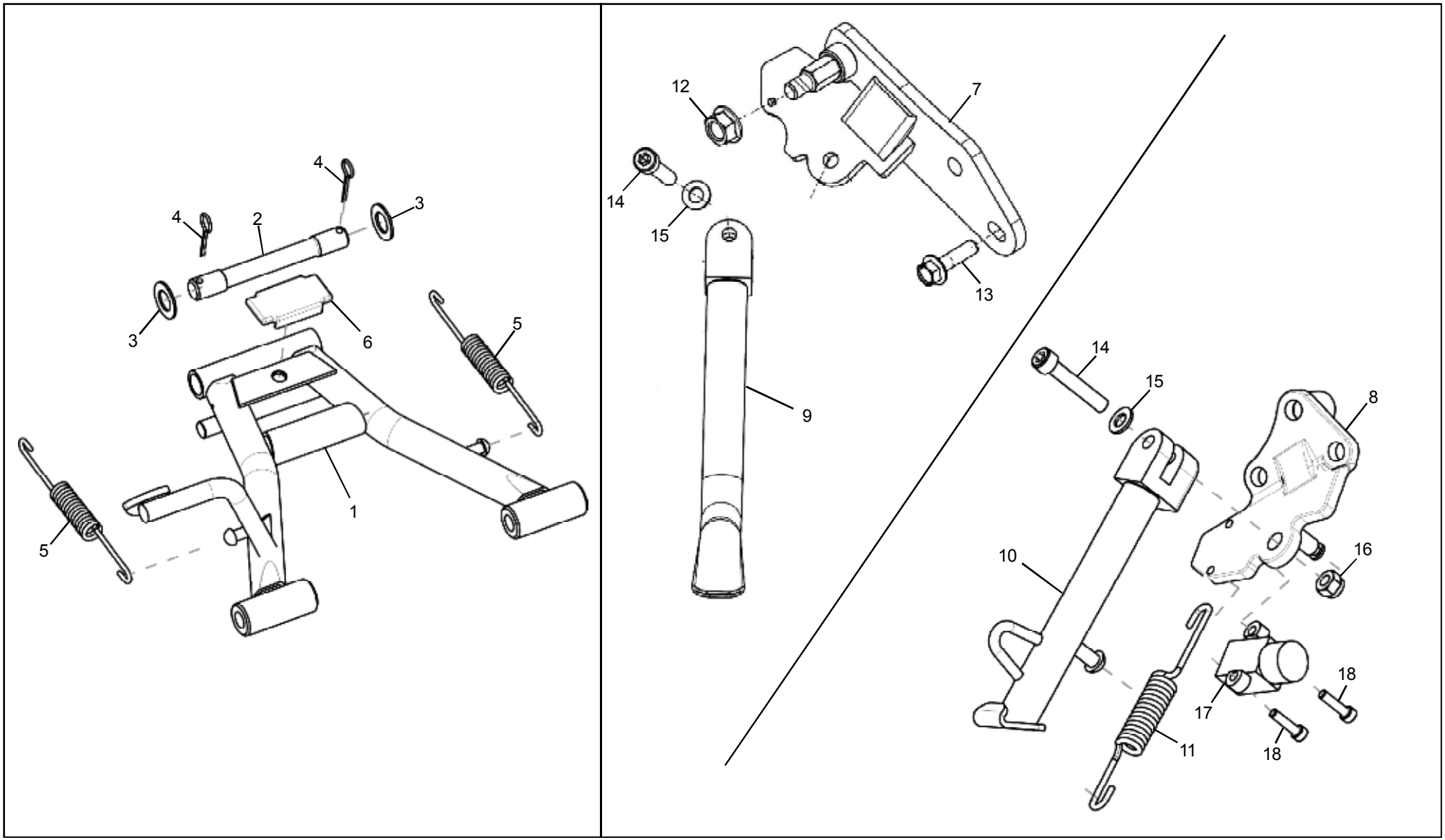

18 - 10 CENTER & SIDE STANDS

Key No.	Part Number	Description	Qty	Bullet EFI	Classic				Conti GT	Remarks
					500	DS	BG	Chrome		
1	801580	Center Stand Complete - Black	1	●	●			●		
	858035	Center Stand Complete - Squadron Blue	1		●					
	873014	Center Stand Complete - Desert storm	1			●				
	825379	Center Stand Complete - Battle Green	1				●			
	867061	Center Stand Complete - Black	1						●	
2	586015/a	Spindle	1	●	●	●	●	●	●	
3	586016/a	Plain Washer	2	●	●	●	●	●	●	
4	586017/a	Split Pin	2	●	●	●	●	●	●	
5	144766/a	Spring - Main Stand	2	●	●	●	●	●	●	
6	145186/c	Rubber Stop	1	●	●	●	●	●	●	
7	866255	Side stand Mtg. Comp. New C5 Black	1	●	●			●		
	858072	Side Stand MTG Complete, Squadron Blue	1		●					
	873117	Side Stand MTG Complete, Desert Storm	1			●				
	825595	Side Stand MTG Complete, Battle Green					●			
8	859061	Side stand Bracket	1						●	
9	583866/B	Side Stand Assembly Powder Coated	1	●						
	593223/B	Side Stand Assembly Powder Coated	1		●	●	●	●		
10	585767/A	Side Stand Assy.	1						●	
11	591992/B	Spring Side Stand (Chrome Plated L 141 MM)	1	●	●	●	●	●		
	591991/B	Spring Side Stand (Black Powder Coated)	1						●	
12	593011/C	Flanged Hex. Nut M10 X 1.25 Pitch	1	●	●	●	●	●	●	
13	586003/A	Flanged Hex. Bolt M8 X 30	1	●	●	●	●	●		
14	521199	Hex. Socket Head Screw M8 X 45	1	●					●	
	593192/A	Flange Shoulder Bolt - Side Stand			●	●	●	●		

18 - 10 CENTER & SIDE STANDS

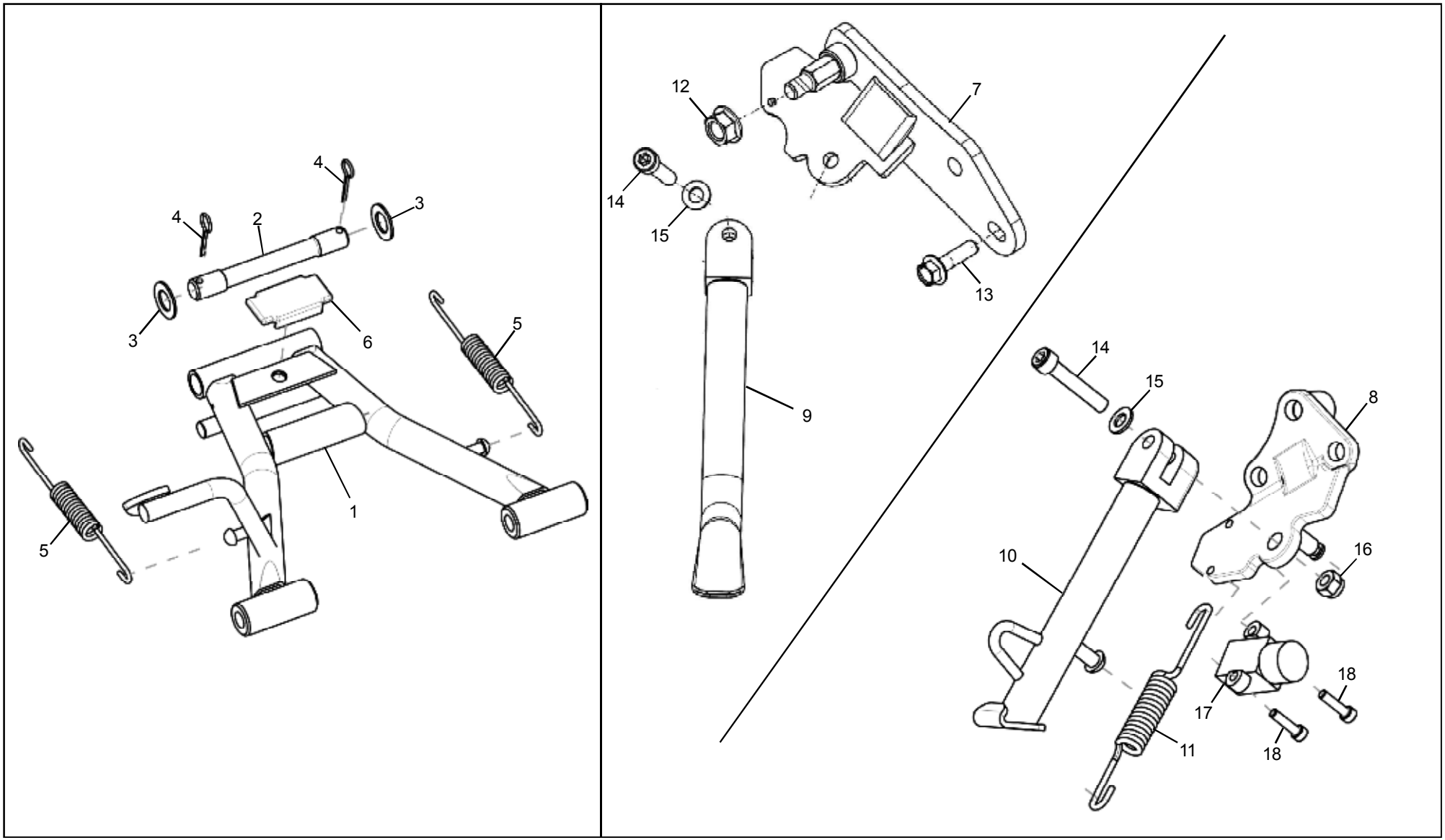

18 - 10 CENTER & SIDE STANDS

Key No.	Part Number	Description	Qty	Bullet EFI	Classic				Conti GT	Remarks
					500	DS	BG	Chrome		
15	586036/A	Plain Washer M8	1	●	●	●	●	●	●	
16	586004/A	Hex. Nylock Nut M8 X 9.5	1	●	●	●	●	●	●	
17	581738/A	Switch, Side Stand	1	●					●	
	586164/A	Side stand switch - With strap	1		●	●	●	●		
18	500632	Hex. Screw Head Cap Screw M5 X 20	2	●	●	●	●	●	●	

19 - 10 FOOT RESTS & BRAKE PEDAL - BULLET EFI & CLASSIC MODELS

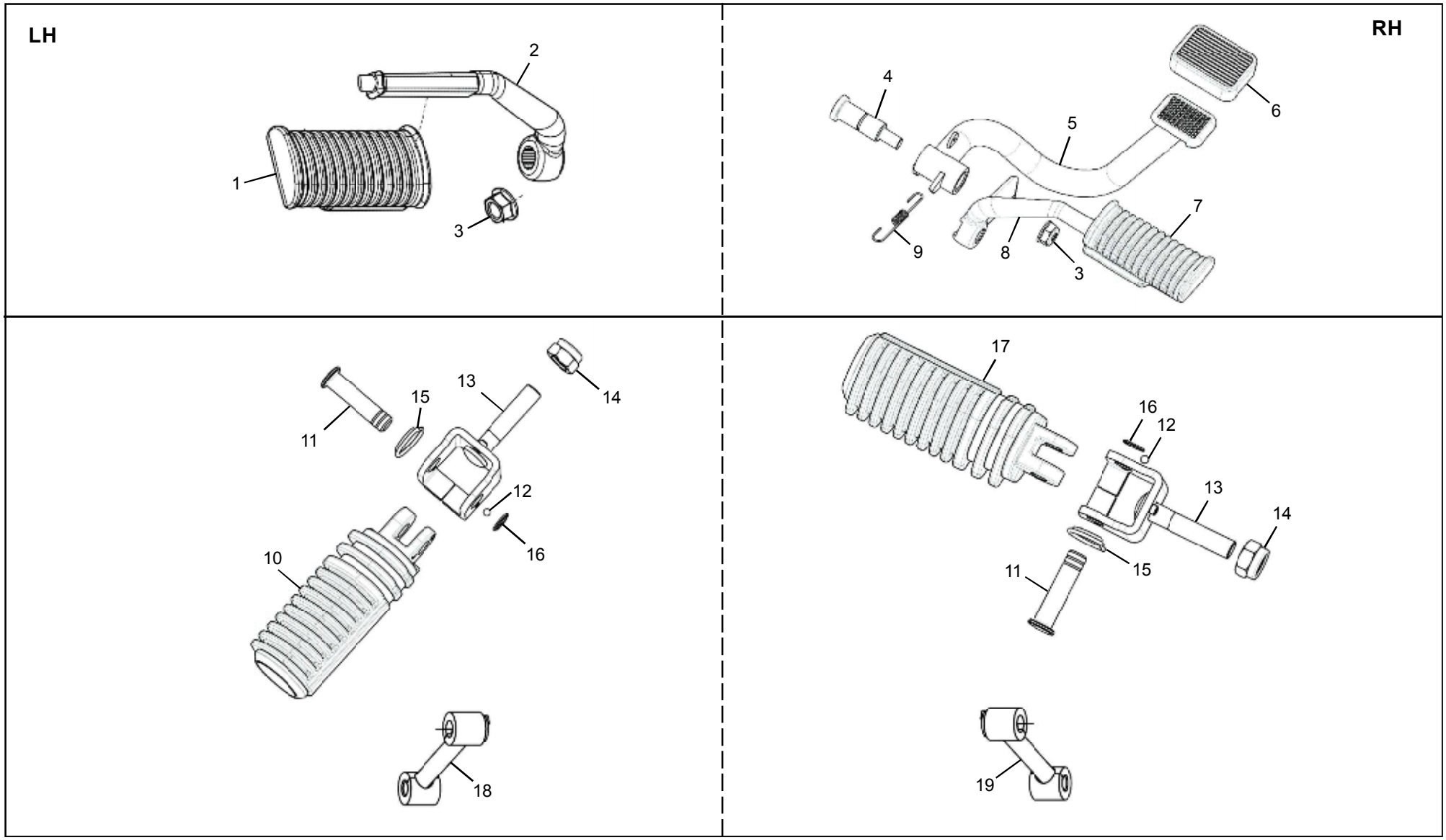

19 - 10 FOOT RESTS & BRAKE PEDAL - BULLET EFI & CLASSIC MODELS

Key No.	Part Number	Description	Qty	Bullet EFI	Classic				Conti GT	Remarks
					500	DS	BG	Chrome		
1	591425/A	Sleeve LH C5	1	●	●	●	●	●		
2	801459	Foot Rest Arm LH PC Black	1	●	●			●		
	858034	Foot Rest Arm LH Squadron Blue	1		●					
	873009	Foot Rest Arm LH Desert Storm	1			●				
	825374	Footrest Arm LH C5 Olive Green	1				●			
3	586082/a	Flange U Nut M10 X 1.25	2	●	●	●	●	●		
4	1010058/b	Boss Pedal Mounting	1	●	●	●	●	●		
5	1010057/b	Brake Pedal	1	●	●	●	●	●		
6	144886/d	Brake Pedal Rubber	1	●	●	●	●	●		
7	591428/B	Sleeve RH C5	1	●	●	●	●	●		
8	801619	Foot Rest Arm RH Black Euro IV	1	●	●			●		
	858062	Foot Rest Arm RH Squadron Blue Euro IV	1		●					
	873108	Foot Rest Arm RH Desert Storm Euro IV	1			●				
	825582	Foot Rest Arm RH Olive Green Euro IV	1				●			
9	594067/c	Return Spring	1	●	●	●	●	●		
10	1010132/A	Pillion Footrest Assy -LH	1	●	●	●	●	●		
11	594372/b	Lock Pin Foot Rest	2	●	●	●	●	●		
12	580380/a	Ball	2	●	●	●	●	●		
13	594447/B	Backet Assy - Pillion Footrest	2	●	●	●	●	●		
14	594009/b	Hex Nylock Nut M10 X 1.25	2	●	●	●	●	●		
15	580381/D	Pillion Footrest Spring	2	●	●	●	●	●		
16	550141/a	Circlip	2	●	●	●	●	●		
17	1010060/A	Pillion Foot Rest Assy - RH	1	●	●	●	●	●		
18	1010201/A	Pillion Support LH	1	●	●	●	●	●		

19 - 10 FOOT RESTS & BRAKE PEDAL - BULLET EFI & CLASSIC MODELS

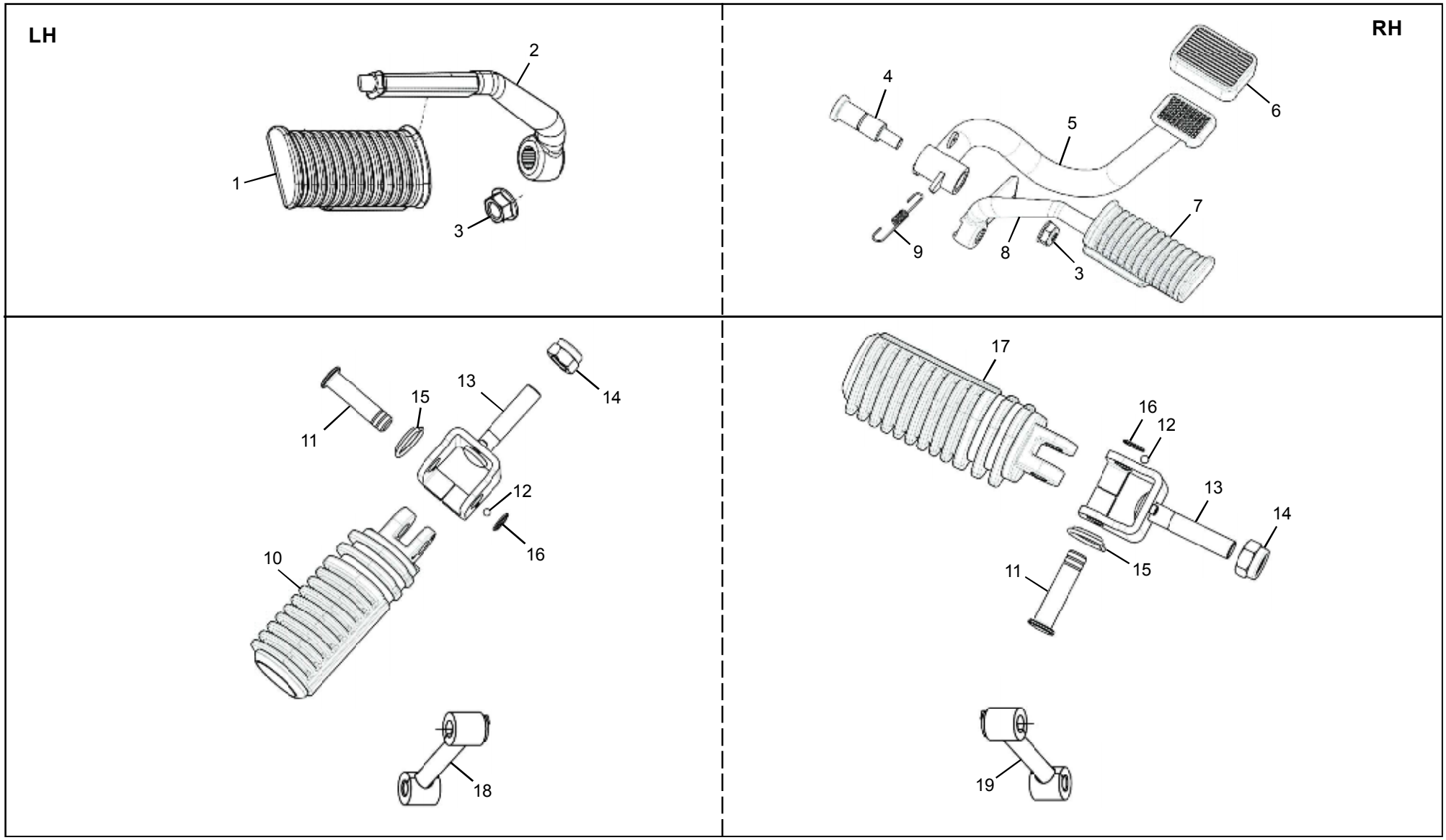

19 - 10 FOOT RESTS & BRAKE PEDAL - BULLET EFI & CLASSIC MODELS

Key No.	Part Number	Description	Qty	Bullet EFI	Classic				Conti GT	Remarks
					500	DS	BG	Chrome		
19	1010200/A	Pillion Support RH	1	●	●	●	●	●		

19 - 15 FOOT RESTS, GEAR SHIFT, BRAKE PEDAL - CONTINENTAL GT

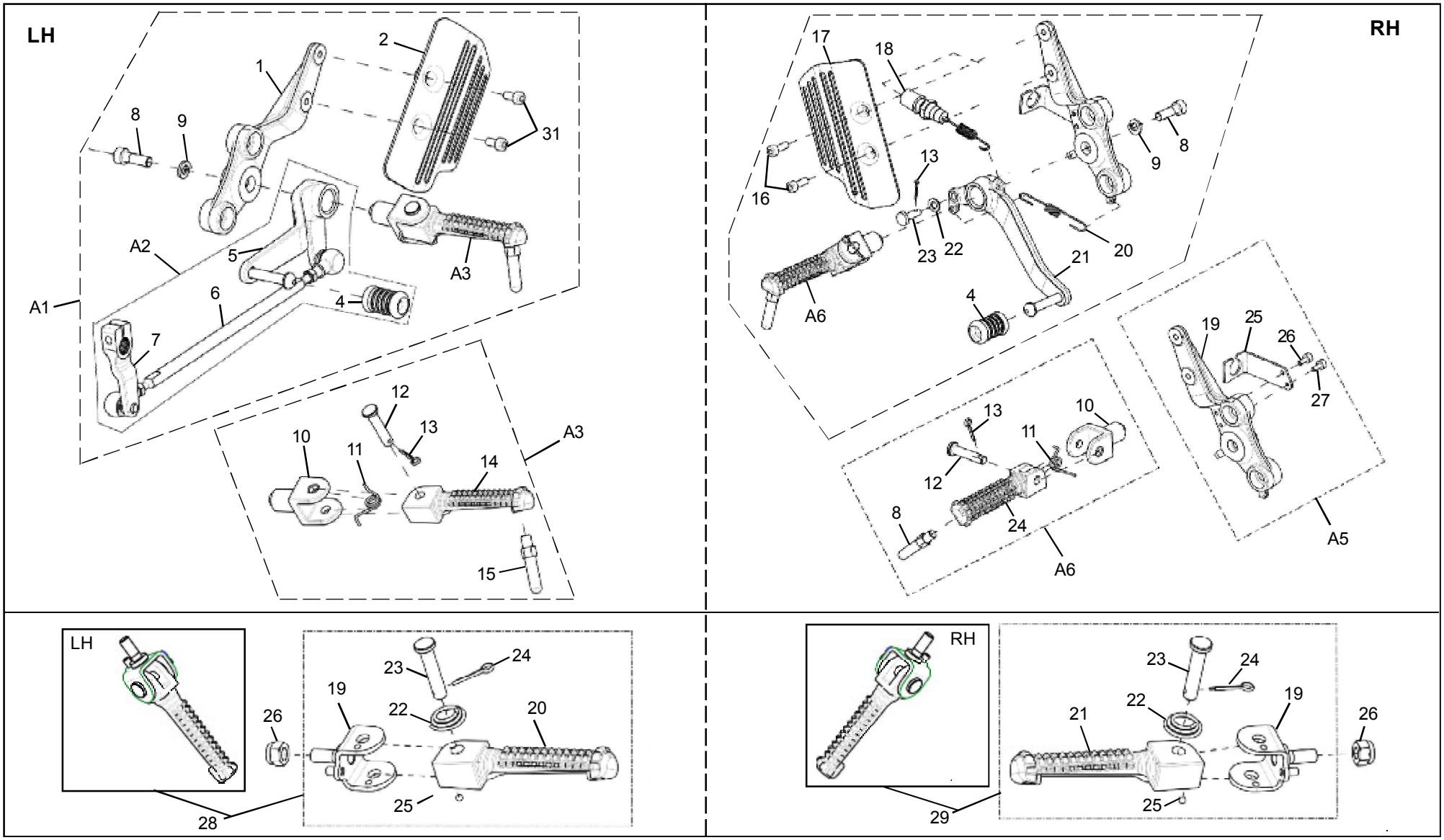

19 - 15 FOOT RESTS, GEAR SHIFT, BRAKE PEDAL - CONTINENTAL GT

Key No.	Part Number	Description	Qty	Bullet EFI	Classic				Conti GT	Remarks
					500	DS	BG	Chrome		
A1	**585581/a**	Rider Foot Rest Kit Comp LH	1						●	
A2	**585288/c**	Gear Shifter Link Rod Assy	1						●	
A3	**859063**	Rider Footrest Assy-LH	1						●	
A4	**585580/A**	Rider Foot Rest Kit Assy RH	1						●	
A5	**859067**	Rider Footrest Bracket Comp-RH	1						●	
A6	**859069**	Rider Footrest Assy-RH	1						●	
1	**585506/a**	Rider Footrest Bracket-LH	1						●	
2	859066	Heel Guard Lh-Rider	1						●	
3	590906/c	Hex.Socket Hd.Cap Screw,M6 X 1 X 14	2						●	
4	550507/a	Sleeve, Gear Lever	2						●	
5	585249/e	Toe Lever Assy.	1						●	
6	585248/c	Link Rod Assy	1						●	
7	585252/d	Gear Shifter Lever Short	1						●	
8	560506	Hex Socket Head Screw M8 X 25	2						●	
9	586038/a	Spring Washer M8	2						●	
10	**585507/a**	Bracket -Foot Rest	2						●	
11	585428/a	Spring-Rider Footrest	2						●	
12	585512/c	Lock Pin-Footrest	2						●	
13	586045/a	Spilt Pin	3						●	
14	859065	Footrest-LH	1						●	
15	585509/b	Pin-Footrest	2						●	
16	570030	Hex Soc Head Cap Screw, M6 X 20	2						●	
17	859071	Heel Guard Rh-Rider	1						●	
18	585469/A	Rear Brake Switch	1						●	

19 - 15 FOOT RESTS, GEAR SHIFT, BRAKE PEDAL - CONTINENTAL GT

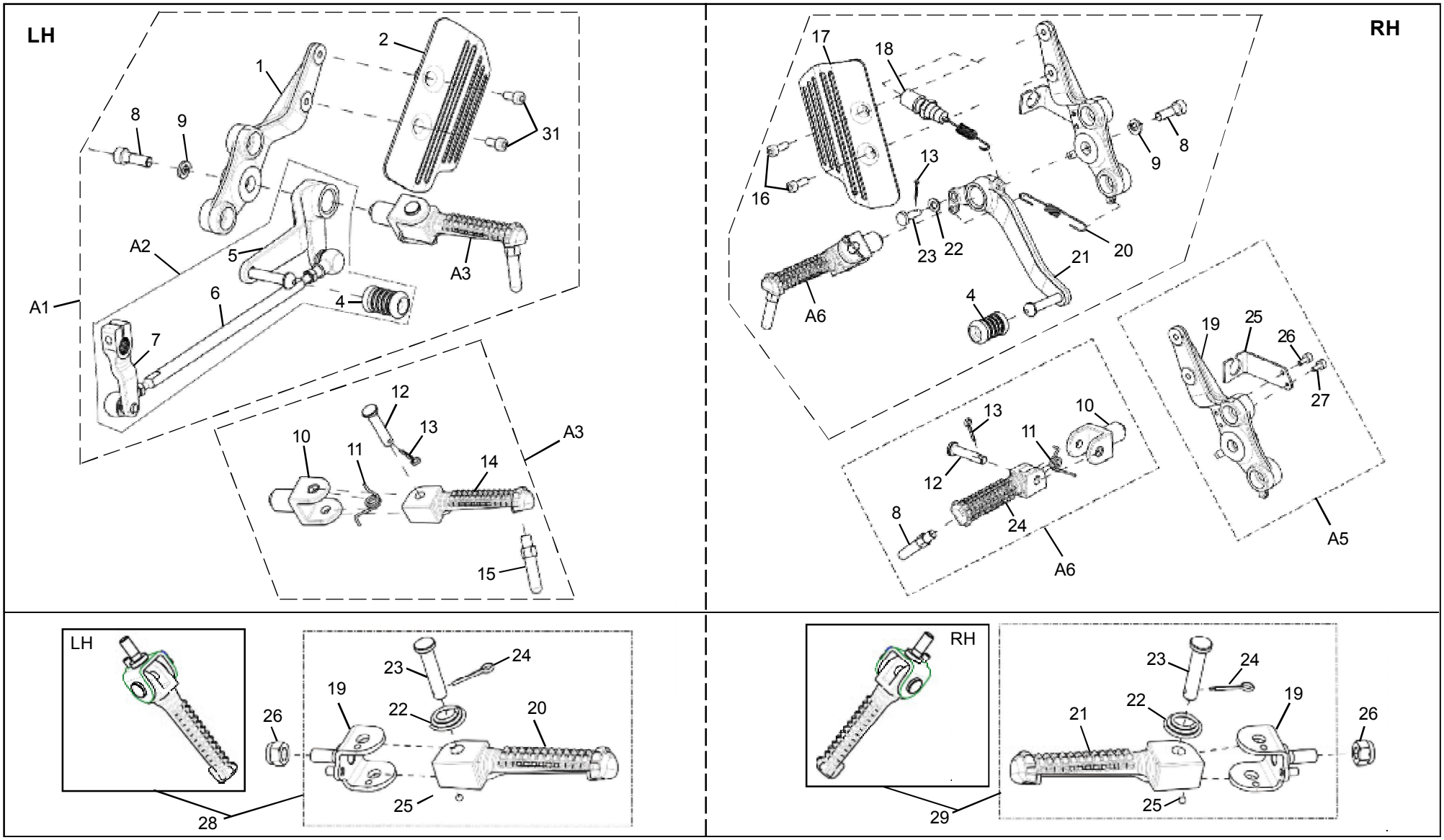

19 - 15 FOOT RESTS, GEAR SHIFT, BRAKE PEDAL - CONTINENTAL GT

Key No.	Part Number	Description	Qty	Bullet EFI	Classic				Conti GT	Remarks
					500	DS	BG	Chrome		
19	585012/b	Rider Footrest Bracket-RH	1						●	
20	**585582/a**	Spring-Pedal Return	1						●	
21	859068	Brake Pedal Comp-Rh	1						●	
22	586032/A	Plain Washer	1						●	
23	594537/A	Pin-Master Cylinder	1						●	
24	**585010/f**	Foot Rest-RH	1						●	
25	585150/B	Brake Light Mtg Clamp	1						●	
26	570281/a	Hex.Socket Head Cap Screw,M4X10	2						●	

20 - 10 ABS BRACKET - BULLET EFI & CLASSIC MODELS

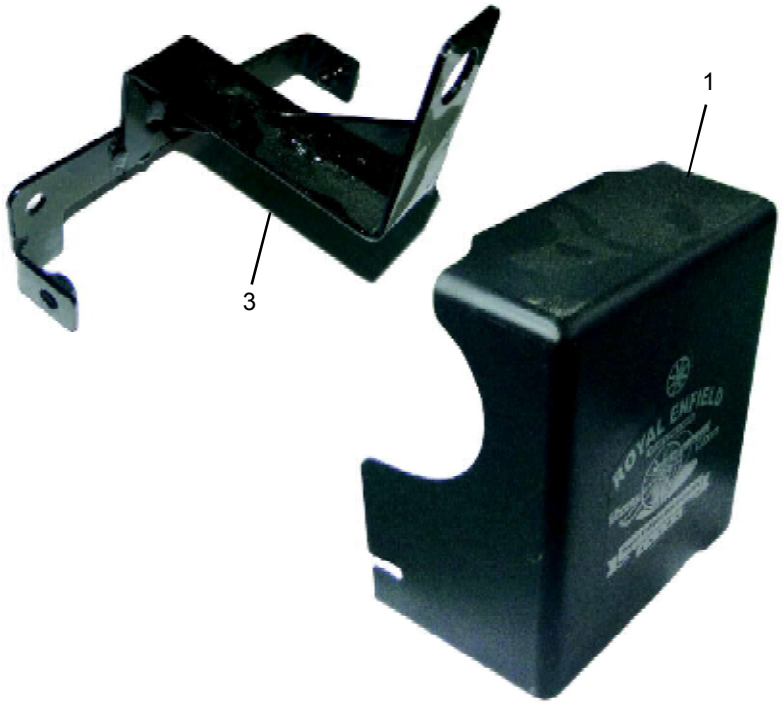

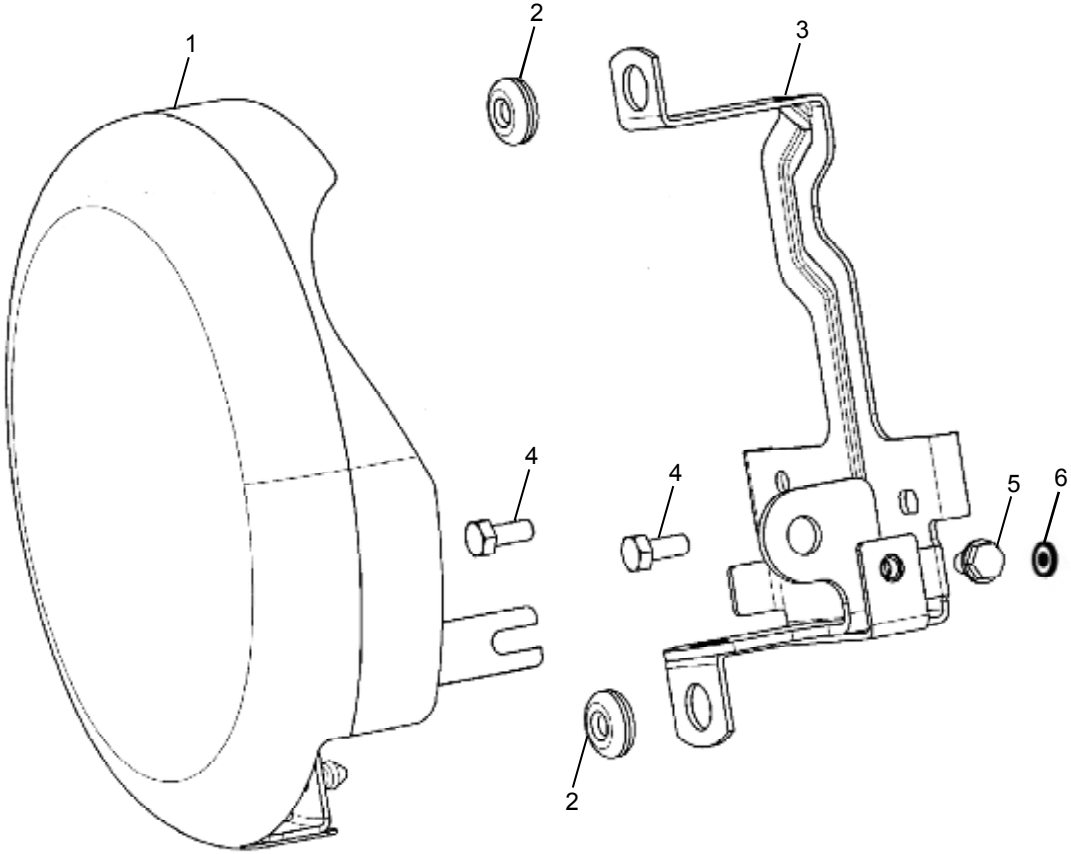

20 - 10 ABS BRACKET - BULLET EFI & CLASSIC MODELS

Key No.	Part Number	Description	Qty	Bullet EFI	Classic				Conti GT	Remarks
					500	DS	BG	Chrome		
1	855010	Throttle Cover - Black	1	●						
	866245	Lid Assy - Black	1		●					Also for Lagoon & Tan colours
	858064	Lid Assy - Squadron Blue	1		●					
	873110	Lid Assy - Desert Storm	1			●				
	825584	Lid Assy - Olive Green	1				●			
	868044	Lid Assy - Ni-Cr Plating	1					●		
2	521088	Grommet	2	●	●	●	●	●		
3	1010190/a	ABS Bracket Assembly	1	●						
	866264	Bracket Assembly - ABS Black	1		●					Also for Lagoon & Tan & Chrome models
	858075	Bracket Assembly - ABS Squadron Blue	1		●					
	873122	Bracket Assembly - ABS Desert Storm	1			●				
	825602	Bracket Assembly - ABS Olive Green	1				●			
4	142274	Hex.Screw M6 X 16	2	●	●	●	●	●		
5	586003/a	Flanged Hex Bolt M8 X 30	1	●	●	●	●	●		
6	586035/A	Plain Washer, M6	1	●	●	●	●	●		

20 -15 UTILITY BOX - CONTINENTAL GT

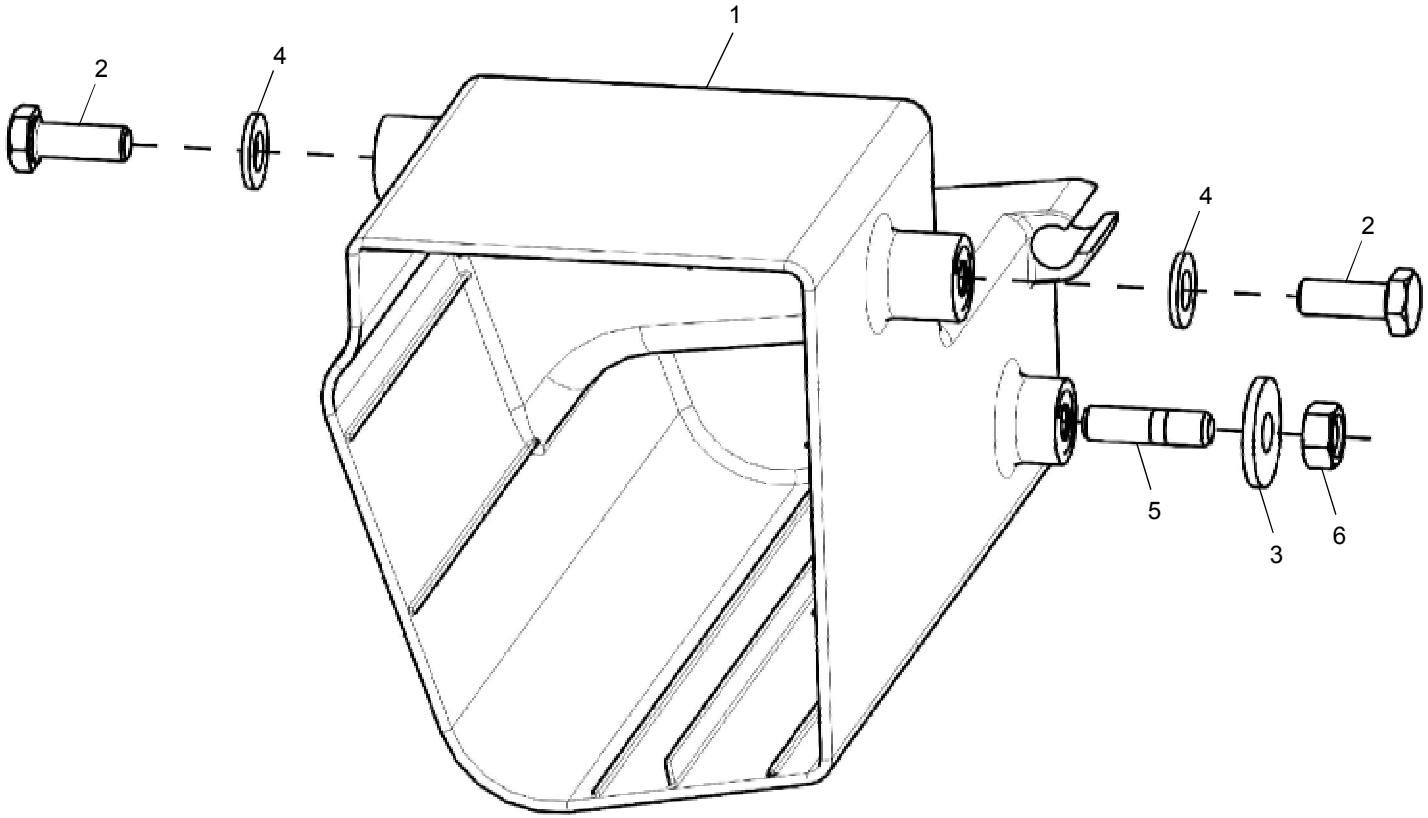

20 -15 UTILITY BOX - CONTINENTAL GT

Key No.	Part Number	Description	Qty	Bullet EFI	Classic				Conti GT	Remarks
					500	DS	BG	Chrome		
1	585662/A	Utility Box	1						●	
2	142274	Hex Screw,M6 X 16	2						●	
3	586035/A	Plain Washer	1						●	
4	586032/A	Plain Washer	2						●	
5	145103/A	Stud	1						●	
6	141060	Hex.Nut M6	1						●	

21 -10 SIDE PANELS - CONTINENTAL GT

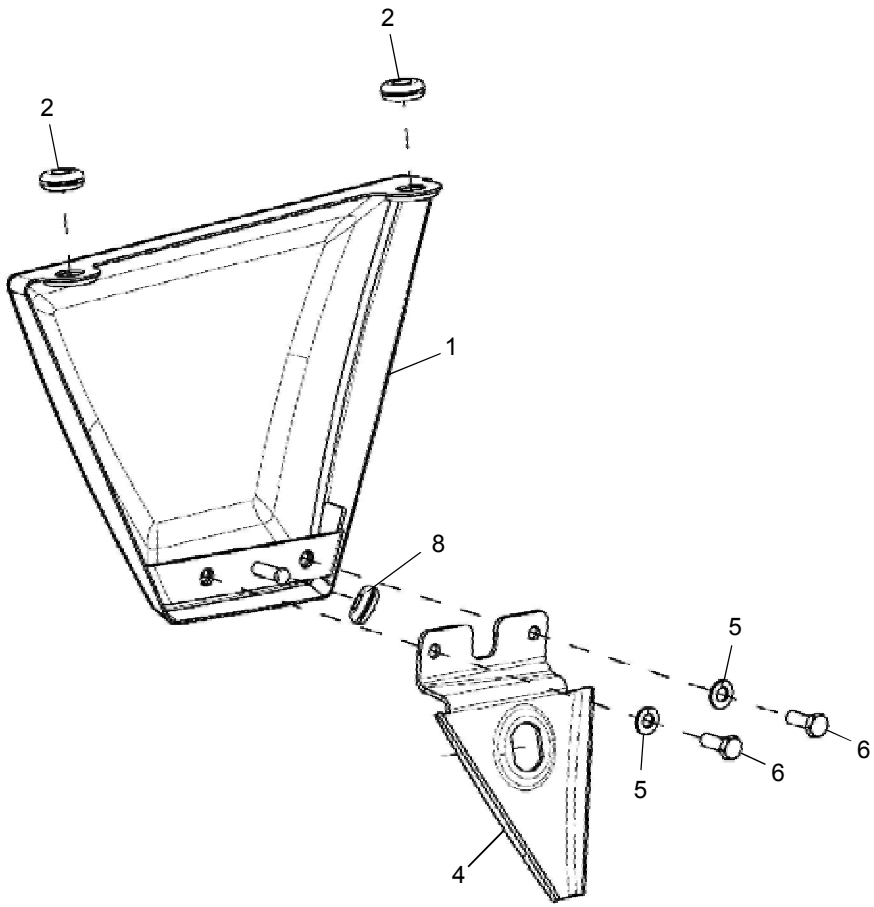

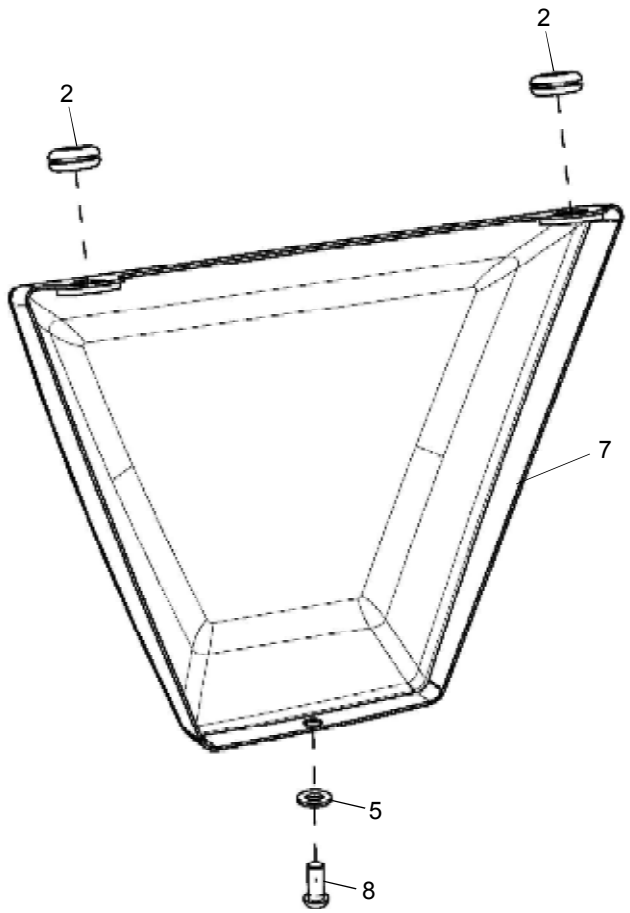

21 -10 SIDE PANELS - CONTINENTAL GT

Key No.	Part Number	Description	Qty	Bullet EFI	Classic				Conti GT	Remarks
					500	DS	BG	Chrome		
1	866174	Side Panel LH - Black	1						●	
	877008	Side Panel LH Red	1						●	
	851033	Side Panel LH Green	1						●	
2	521112/B	Grommet	4						●	
3	521088/B	Grommet	1						●	
4	867069	Bracket LH - Side Panel	1						●	
5	586032/A	Washer	3						●	
6	142274	Hex. Screw M6 X 16	2						●	
7	866173	Side Panel RH - Black	1						●	
	877005	Side Panel RH Red	1						●	
	851032	Side Panel RH Green	1						●	
8	145882/A	Cross Recessed Pan Head Screw M6X14	1						●	

22 -10 ELECTRICAL BOX - BULLET EFI & CLASSIC MODELS

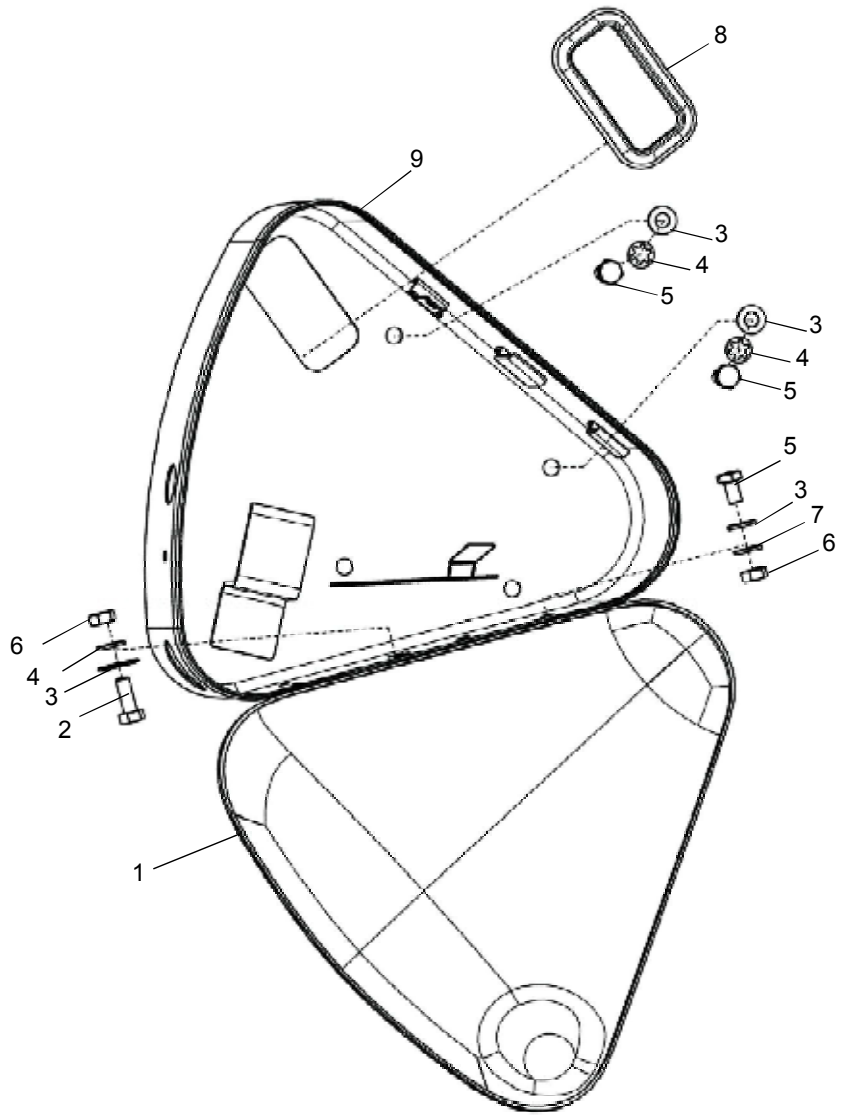

22 -10 ELECTRICAL BOX - BULLET EFI & CLASSIC MODELS

Key No.	Part Number	Description	Qty	Bullet EFI	Classic				Conti GT	Remarks
					500	DS	BG	Chrome		
1	866261	Tool Box Elec. W/Stick B500 Black EU IV	1	●						
	806135	Tool Box Elec. W/Stick B500 Marsh Grey EU IV	1	●						
	880069	Tool Box Elec. W/Stick B500 Forest Green EU IV	1	●						
	866244	Tool Box Elec. W/Stick Black BVI Eu IV	1		●					
	858063	Tool Box Elec. W/Stick Squadron Blue BVI Eu IV	1		●					
	881039	Tool Box Elec. W/Sticker Tan BVI Eu IV	1		●					
	818033	Tool Box Elec. W/Stick Lagoon BVI Eu IV	1		●					
	873109	Tool Box Elec. W/Stik Desert Storm BVI Eu IV	1			●				
	825583	Tool Box Elec. W/Sti Olive Green BVI Eu IV	1				●			
	866250	Tool Box Elec W/St Cl 500 Chrome Black EU IV	1					●		
	806128	Tool Box Elec W/S Cl 500 Chrm Graphite EuIV	1					●		
	880059	Tool Box Elec W/S Cl 500 Chrm Green Eu IV	1					●		
2	141093	Hex Screw, M6 X 16	1	●	●	●	●	●		
3	586035/A	Washer Plain	4	●	●	●	●	●		
	593012/A	Plain Washer	4	●	●	●	●	●		
4	140129	Lock Washer Internal Teeth	3	●	●	●	●	●		
5	142274	Hex. Screw M6 X 1 X 16	3	●	●	●	●	●		
6	141060	Hex. Nut M6	2	●	●	●	●	●		
7	586032/A	Plain Washer M6	1	●	●	●	●	●		
8	591352/A	Grommet - Electrical Box	1	●	●	●	●	●		
9	590998/B	Rubber Beading	1	●	●	●	●	●		

23 -10 BATTERY, BATTERY CARRIER & COVER

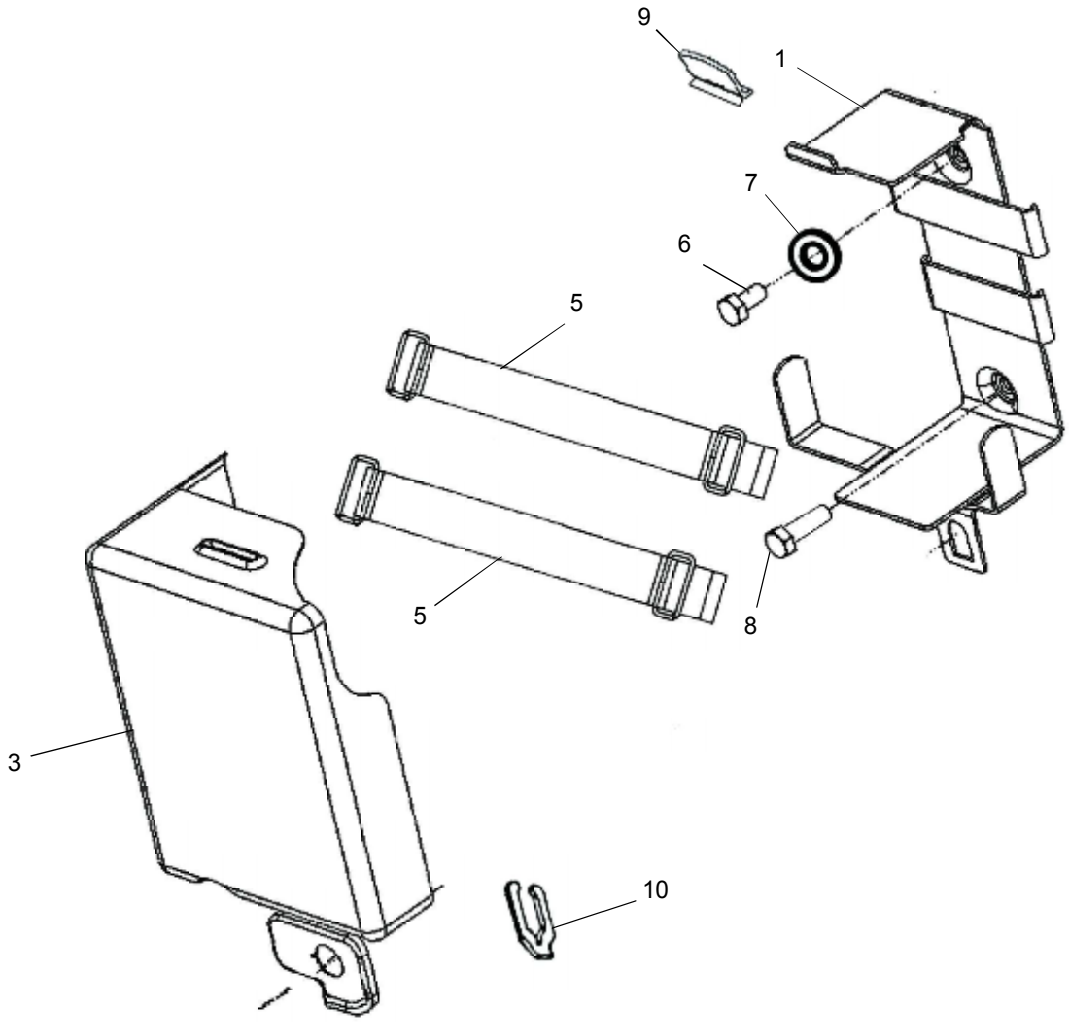

CONTINENTAL GT

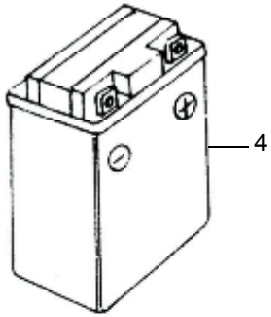

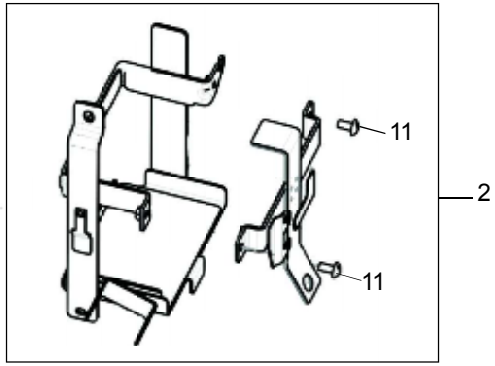

23 -10 BATTERY, BATTERY CARRIER & COVER

Key No.	Part Number	Description	Qty	Bullet EFI	Classic				Conti GT	Remarks
					500	DS	BG	Chrome		
1	591692/e	Battery Carrier Assy	1	●	●					
2	1010149/a	Battery Carrier Assy	1						●	
3	866073	Cover - Battery Black New	1	●	●					
	858017	Cover - Battery C5 Squadron Blue New	1		●					
	873040	Cover - Battery C5 Desert Storm New	1			●				
	825497	Cover - Battery C5 Olive Green New	1				●			
	592595/a	Battery Cover Chrome Plated	1					●		
4	146134/c	Battery - 12V 14AH	1	●	●	●	●	●	●	
5	560058/b	Strap Battery	2	●	●	●	●	●		
6	586025/a	Hexa Bolt M8 X 1.25 X 16	1	●	●	●	●	●		
7	140437/1	Washer	1	●	●	●	●	●		
8	586022/a	Hex. Flanged Bolt M8 X 1.25 X 45	1	●	●	●	●	●		
9	560210/A	Cap Battery Carrier - Rubber Rectangle	1	●	●	●	●	●		
10	143079/b	Clip Lock	1	●	●	●	●	●		
11	593232/a	Phillips Round Head Machined Screw M6 X 13	2						●	

24 -10 WIRING HARNESS & FUSES

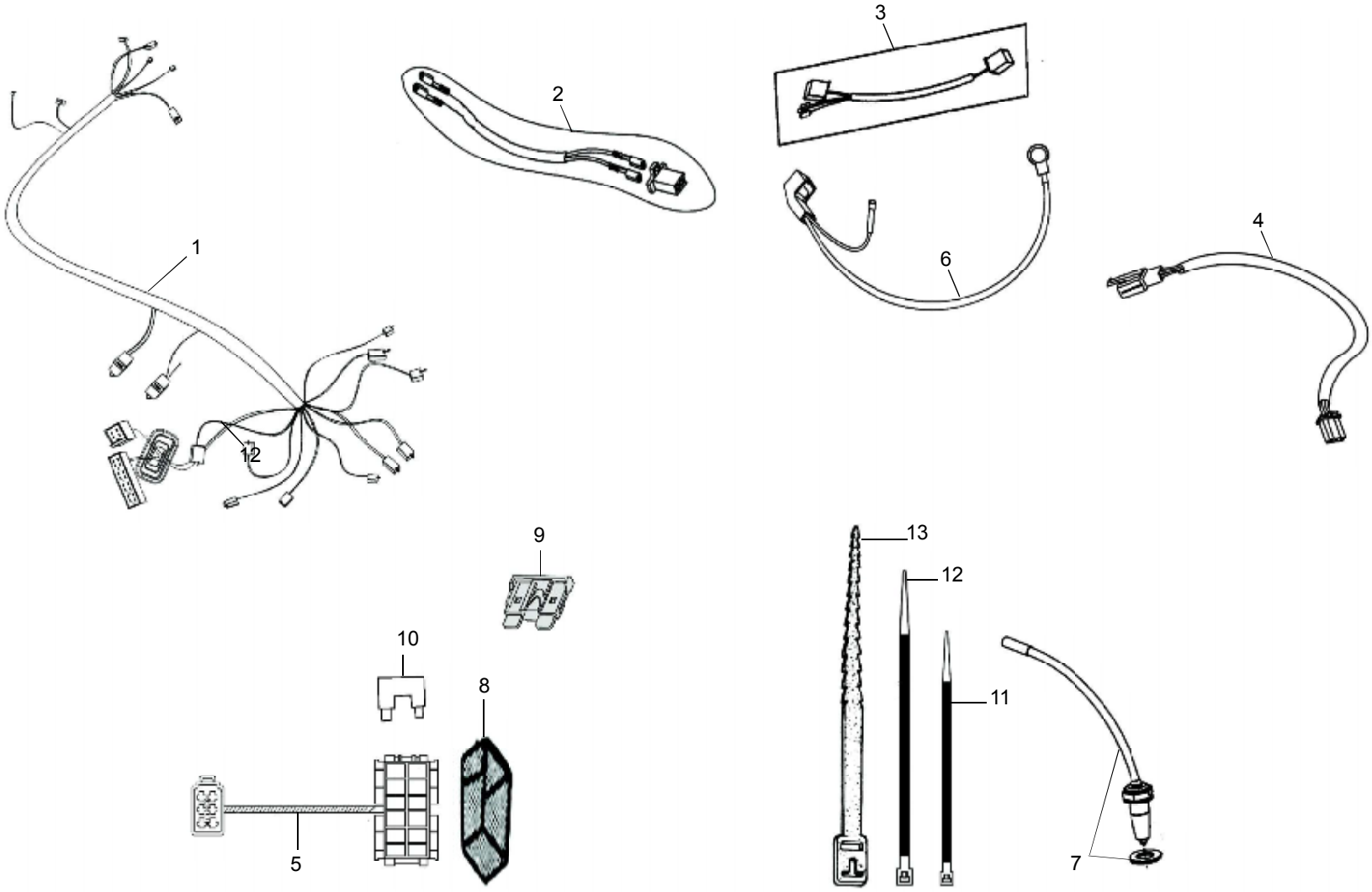

24 -10 WIRING HARNESS & FUSES

Key No.	Part Number	Description	Qty	Bullet EFI	Classic				Conti GT	Remarks
					500	DS	BG	Chrome		
1	1010065/d	Harness - Main Cable	1	●	●	●	●	●		
	1010367/a	Harness - Main Cable	1						●	
2	1010368/a	Add On lead EXAI	1						●	To be used with 1010368/a Harness main cable
3	591560/c	Harness - Tail Lamp	1	●	●	●	●	●		
	585464/b	Harness - Tail Lamp	1						●	
4	147271/b	Add On Lead - Clutch Switch	1	●	●	●	●	●		
	585459/b	Add On Lead - Clutch Switch	1						●	
5	1010129/B	Fuse Box Add ON	1	●	●	●	●	●		
	585673/a	Fuse Box Add ON	1						●	
6	147956/a	Battery Cable - Negative	1	●	●	●	●	●	●	
7	582510/a	Neutral Cable	1	●	●	●	●	●	●	
8	1010150/b	Rubber Holder Fuse Carrier	1	●	●	●	●	●	●	
9	582512/a	Blade Fuse 10 Amps Red	3	●	●	●	●	●		
	582513/a	Blade Fuse 15 Amps Blue	3	●	●	●	●	●		
	591587/a	Blade Fuse 20 Amps Yellow	2	●	●	●	●	●		
10	594525	Mini Blade Fuse - Red - 10 Amps	4						●	
	594524	Mini Blade Fuse - Blue - 15 Amps	3						●	
11	582511/a	Black Cable Strap 8 inches	1	●	●	●	●	●	●	
12	141162/c	Cable Strap 8 Inches	3	●	●	●	●	●	●	
13	141161/c	Cable Strap 6 Inches	2	●	●	●	●	●	●	

25 -10 COMMON KEY, SWITCHES, LOCKS & HORN

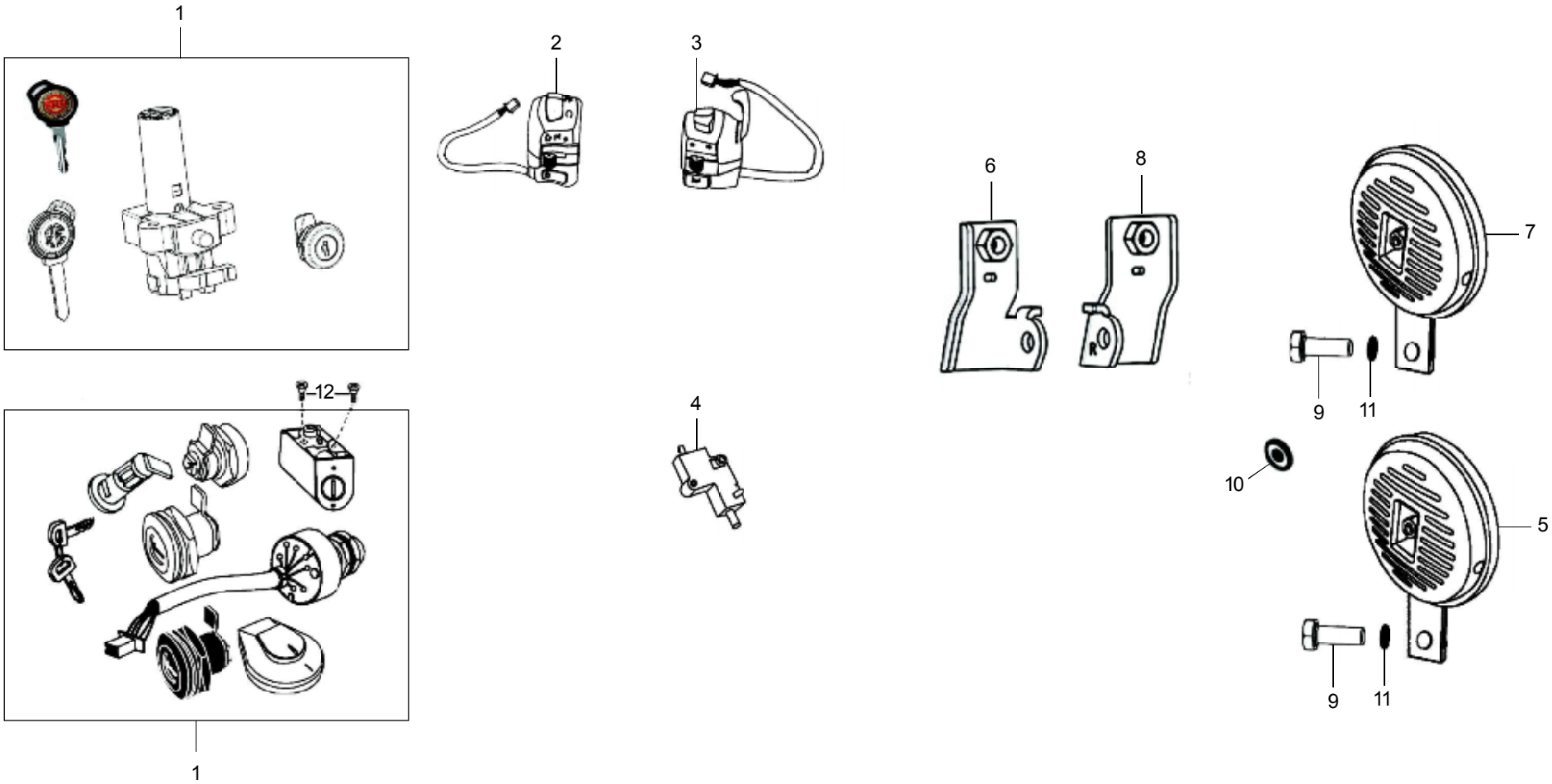

25 -10 COMMON KEY, SWITCHES, LOCKS & HORN

Key No.	Part Number	Description	Qty	Bullet EFI	Classic				Conti GT	Remarks
					500	DS	BG	Chrome		
1	593277/a	Common key Set	1	●	●	●	●	●	●	
	585463/c	Igniton switch with Steering Lock Assy	1						●	
2	590827/a	Switch Module RH	1	●	●	●	●	●	●	
3	581029/b	Switch Module LH	1	●	●	●	●	●	●	
4	560632	Clutch switch	1	●	●	●	●	●	●	
5	146168/b	Horn	1	●	●	●	●	●		
	591980/a	Horn LT	1						●	
6	594228/b	Bracket LH Assembly - Horn Mounting	1						●	
7	591981/a	Horn HT	1						●	
8	594332/b	Bracket RH Assembly - Horn Mounting	1						●	
9	586002/a	Flanged Hex. Bolt M8 X 20	1	●	●	●	●	●		
	586002/a	Flanged Hex. Bolt M8 X 20	2						●	
10	586036/a	Plain Washer M8	1	●	●	●	●	●		
11	143407	Spring Washer M8	2						●	
12	145143	Steering Lock Mounting Screw (M6 × 12)	2	●	●	●	●	●		

26 - 10 METERS & INSTRUMENT CONSOLE

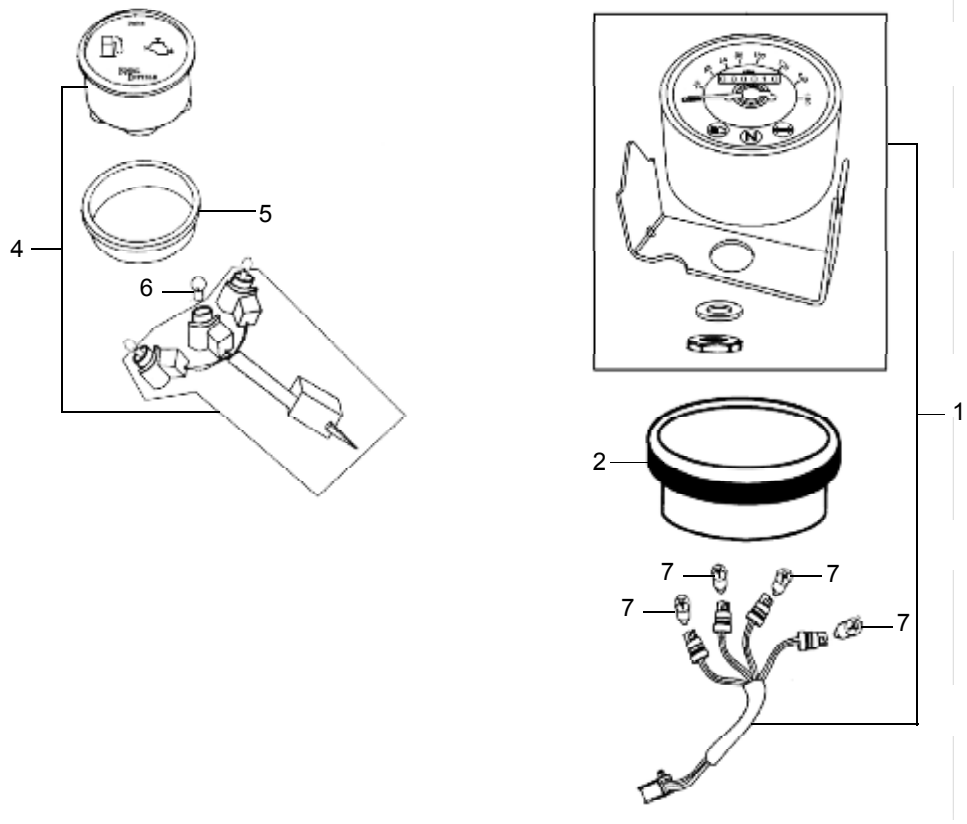

CONTINENTAL GT

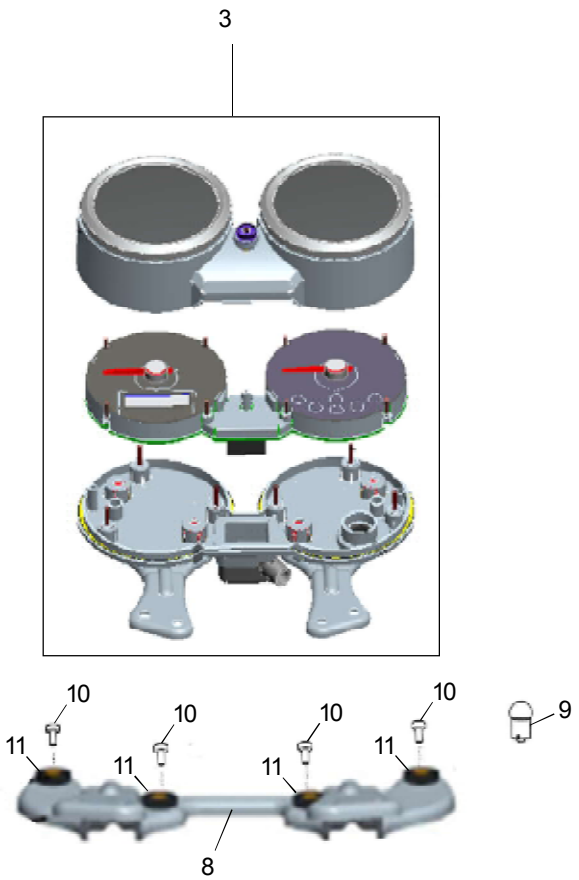

26 - 10 METERS & INSTRUMENT CONSOLE

Key No.	Part Number	Description	Qty	Bullet EFI	Classic				Conti GT	Remarks
					500	DS	BG	Chrome		
1	590431/a	Speedometer (KMPH) Silver	1	●						For Europe Only
	147770/e	Speedometer (KMPH) Gold	1	●						For Europe-forest Green Bullet EFI Models
	581341/a	Speedometer -Dual Scale (MPH) Silver	1	●						For UK Only
	581342/a	Speedometer -Dual Scale (MPH) Gold	1	●						For UK - forest Green Bullet EFI Models
	592099/g	Speedometer (KMPH)	1		●	●	●	●		For Classic Models - Europe Only
	584624/d	Speedometer -Dual Scale (MPH)	1		●	●	●	●		For Classic Models - Uk Only
2	110179	Speedometer Rubber Ring	1	●	●	●	●	●		
3	585390/c	Instrument Cluster Assy (KMPH)	1						●	For Europe Only
	585708/a	Instrument Cluster Assy (MPH)	1						●	For UK Only
4	1010321/a	Warning Indicator - Silver	1	●						For Black & Marsh Grey Bullet EFI models
	1010320/a	Warning Indicator - Gold	1	●						For Forest Green Bullet EFI Models
	1010066/a	Warning Indicator	1		●	●	●	●		For Classic Models
5	140193/b	Rubber ring Warning Indicator	1	●	●	●	●	●		
6	592663/a	Bulb 12V - 4W (BA 7S)	1	●	●	●	●	●		
7	591434/a	Bulb, 12V, 3.4 W BA9S Cap	4	●	●	●	●	●		
8	585796/A	Bracket Assy. - Instrument Cluster	1						●	
9	585797/a	Bulb, Neutral Indicator 1.12 W	1						●	
10	500355	Socket Head Cap Screw M6 X 16	4						●	
11	585980/A	Rubber - Grommet	4						●	
12	1010135/a	ABS MIL Circuit Assy	1	●	●	●	●	●		

27 - 10 ELECTRONIC CONTROL UNIT & SENSORS

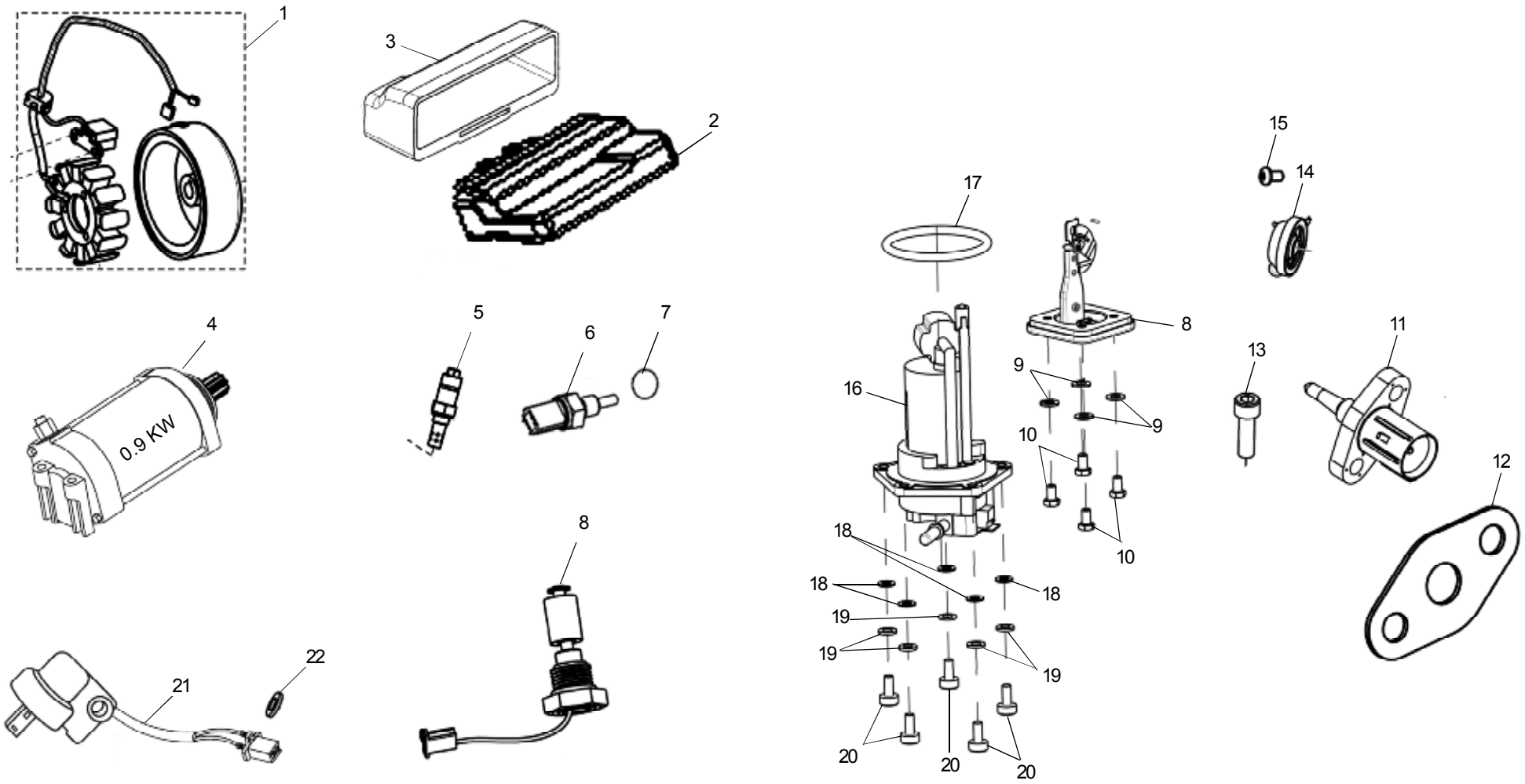

27 - 10 ELECTRONIC CONTROL UNIT & SENSORS

Key No.	Part Number	Description	Qty	Bullet EFI	Classic				Conti GT	Remarks
					500	DS	BG	Chro me		
1	571282/b	Flywheel Magento Assy (18-1 PIP)	1	●	●	●	●	●		
	1010159/a	Flywheel Magento Assy (18-1 PIP)	1						●	
2	587379/a	Electronic Control Unit (500EFI) with Export Programe EU IV	1	●	●	●	●	●		
	1020024/a	Electronic Control Unit (535EFI) with Export Programe EU IV	1						●	
3	1010095/a	Electronic Control Unit Rubber holder	1	●	●	●	●	●	●	
4	560013	Starter Motor	1	●	●	●	●	●	●	
5	1010084/a	Oxygen Sensor	1	●	●	●	●	●	●	
6	576067/a	Engine Oil Temperature Sensor	1	●	●	●	●	●	●	
7	572607/a	‘O’ Ring Temperature Sensor	1	●	●	●	●	●	●	
8	581053/e	Low Fuel Sensor	1	●	●	●	●	●		
	585465/c	Fuel Guage Unit	1						●	
9	141061/1	Washer	4						●	
10	141093	Hex. Screw	4						●	
11	587384/a	Sensor T A	1	●	●	●	●	●	●	
12	571304/a	Gasket - Air Temp Sensor	1	●	●	●	●	●	●	
13	570013	Hex Socket Hd Cap Screw	2	●	●	●	●	●	●	
14	585217/b	Wheel speed sensor ABS	1	●	●	●	●	●	●	
15	594046/a	Hex Socket Button Head Screw M6 X 1	1	●	●	●	●	●	●	
16	587377/a	Fuel Pump Assembly	1	●	●	●	●	●	●	
17	1010088/a	‘O’ - Ring	1	●	●	●	●	●	●	
18	143496/a	Washer - Fibre	5	●	●	●	●	●	●	
19	144636/a	Copper Washer	5	●	●	●	●	●	●	
20	590906/c	Hex Socket Head Screw M6 X 1 X 14	5	●	●	●	●	●	●	
	590906/c	Hex Socket Head Screw M6 X 1 X 14	1	●	●	●	●	●	●	For Roll over Sensor Mtg

27 - 10 ELECTRONIC CONTROL UNIT & SENSORS

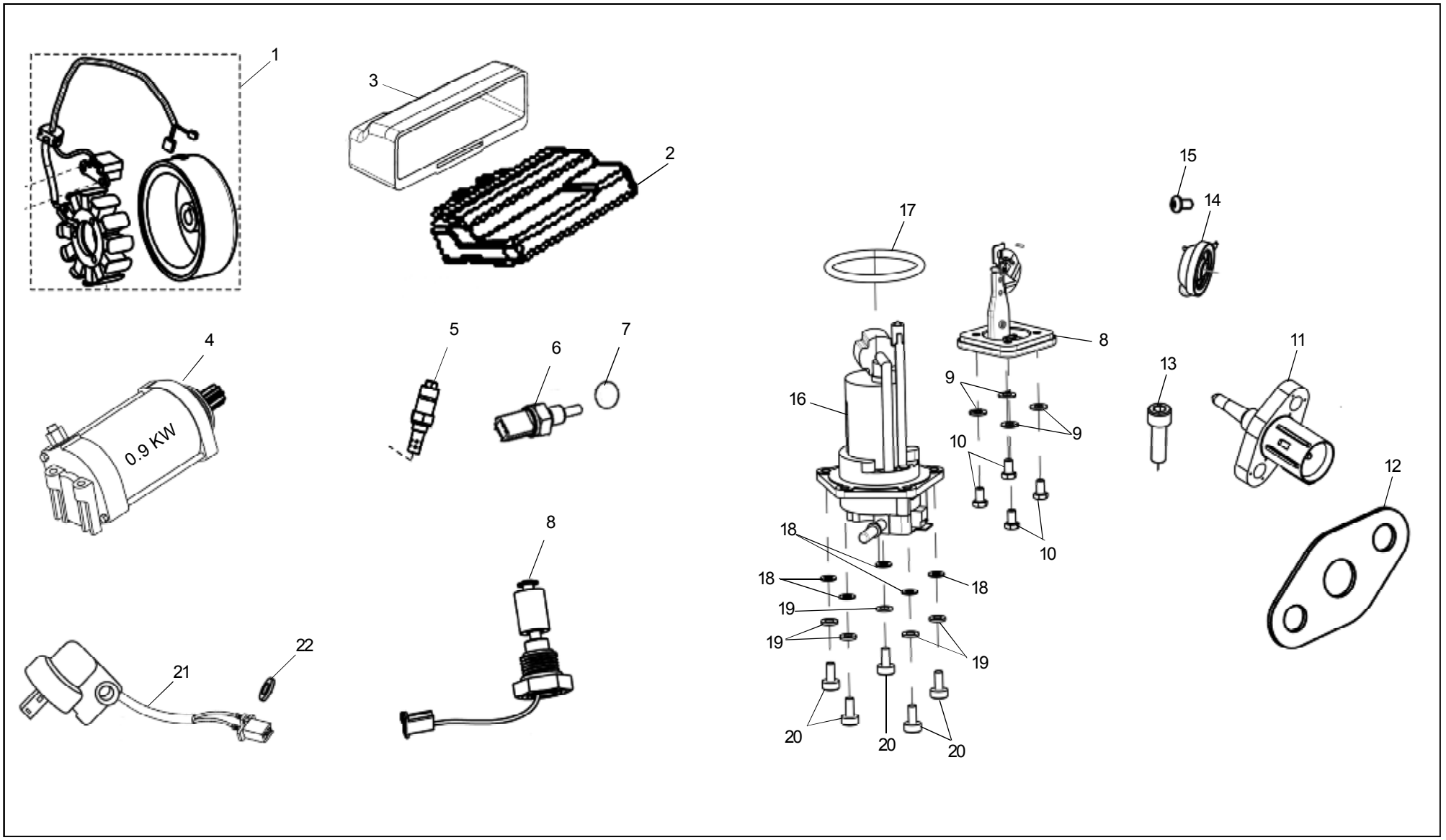

27 - 10 ELECTRONIC CONTROL UNIT & SENSORS

Key No.	Part Number	Description	Qty	Bullet EFI	Classic				Conti GT	Remarks
					500	DS	BG	Chrome		
21	581054/b	Rollover Sensor	1	●	●	●	●	●	●	
22	586032/a	Plain Washer	1	●	●	●	●	●	●	For Roll over Sensor Mtg

28 - 10 RR UNIT, IGNITION COIL, RELAYS, FLASHER UNIT & SUPPRESSOR CAP

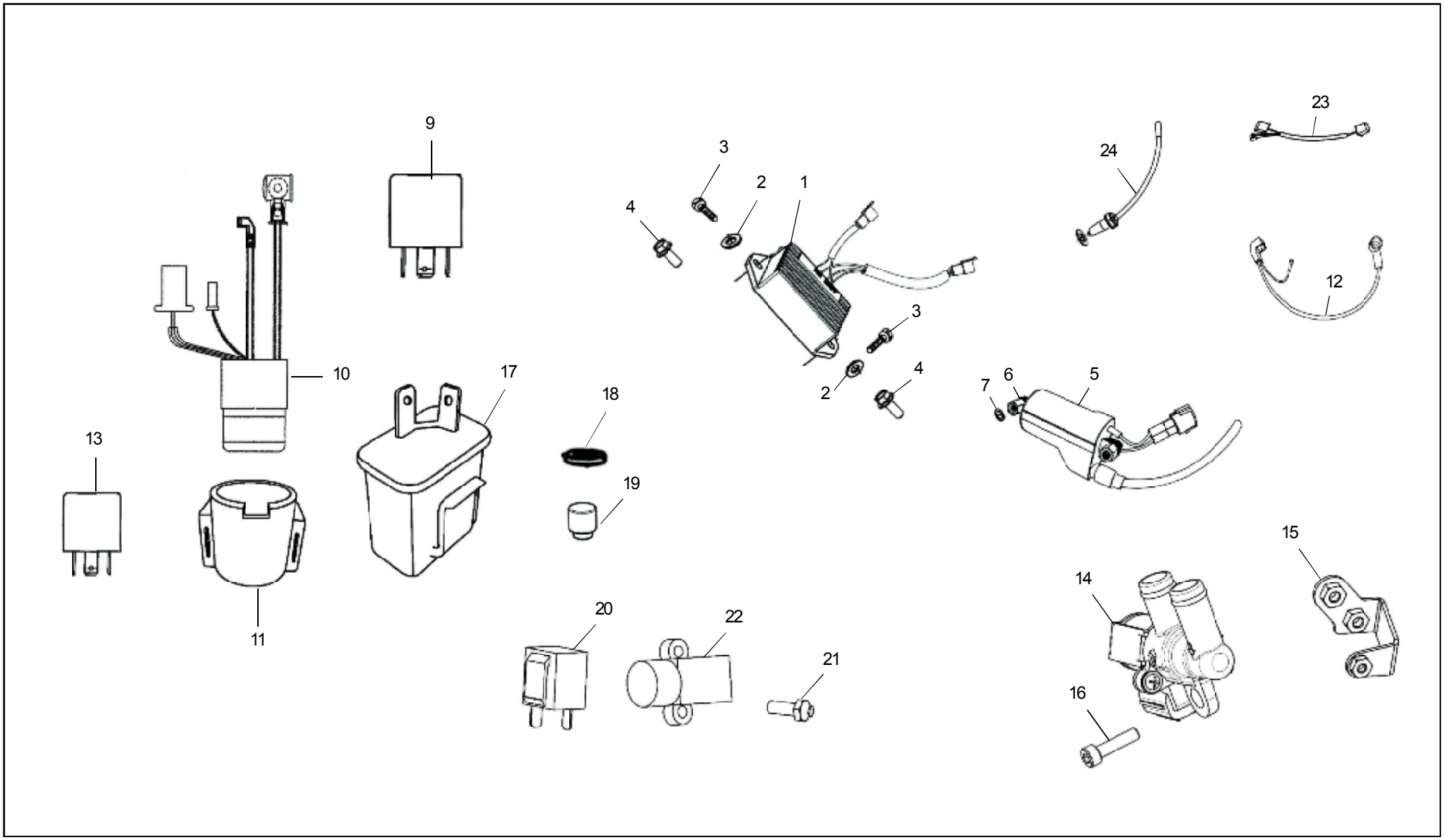

28 - 10 RR UNIT, IGNITION COIL, RELAYS, FLASHER UNIT & SUPPRESSOR CAP

Key No.	Part Number	Description	Qty	Bullet EFI	Classic				Conti GT	Remarks
					500	DS	BG	Chrome		
1	587356/b	R/R Unit 3 Phase	1	●	●	●	●	●	●	
2	141061/a	Punched Washer 6.4,IS:2016,Steel,Zn.PL.	2	●	●	●	●	●	●	
3	145882/a	Cross Recessed Pan Head Screw M6 x 14	2	●	●	●	●	●	●	
4	591577/a	Flanged Hex Bolt-M6 X 1 X 27	2	●	●	●	●	●		
5	1010013/a	Ignition Coil	1	●	●	●	●	●		
	1010022/a	Ignition Coil	1						●	
6	502071	Hex Screw - M5 X 0.8 X 10	1	●	●	●	●	●	●	
7	142606	Lock Washer, Internal teeth	1	●	●	●	●	●	●	
8	500905/c	Suppressor Cap, M14 (Spark Plug)	1	●	●	●	●	●	●	
9	585681/a	Relay (Micro - 5 Pin)	2	●	●	●	●	●	●	
10	147955/d	Relay Starter	1	●	●	●	●	●		
	1010136/a	Relay Starter	1						●	
11	146173/c	Holder Starter Relay	1	●	●	●	●	●	●	
12	147956/b	Battery Cable Negative	1	●	●	●	●	●	●	
13	571059/a	Relay - (Fuel Pump & Injector)	2	●	●	●	●	●	●	
14	587385/a	Solenoid (EXAI or AISV)	1	●	●	●	●	●	●	
15	1010096/c	Bracket Assy Solenoid	1	●	●	●	●	●	●	
16	500632	Screw	1	●	●	●	●	●	●	
17	580396/a	Electronic Flasher Unit	1	●	●	●	●	●	●	
18	1010125/a	Spacer - Solenoid	1	●	●	●	●	●	●	
19	1010124/a	Grommet - Solenoid	1	●	●	●	●	●	●	
20	582544/a	Side Stand Relay Add - On	1	●	●	●	●	●	●	
21	142274	Hex.Screw M6 X 16	2	●	●	●	●	●	●	
22	586164/e	Side Stand Switch with strap	1	●	●	●	●	●	●	

28 - 10 RR UNIT, IGNITION COIL, RELAYS, FLASHER UNIT & SUPPRESSOR CAP

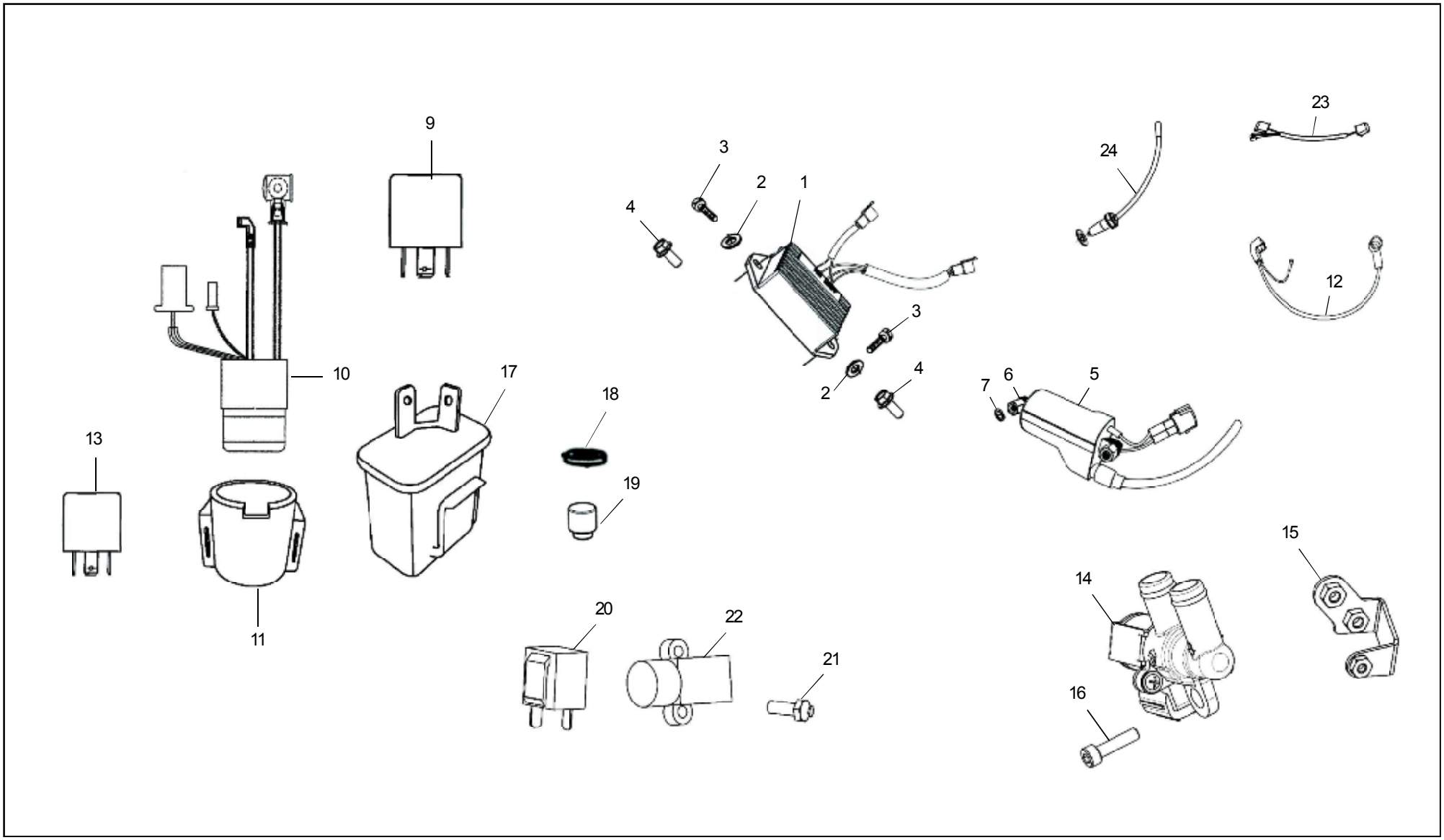

28 - 10 RR UNIT, IGNITION COIL, RELAYS, FLASHER UNIT & SUPPRESSOR CAP

Key No.	Part Number	Description	Qty	Bullet EFI	Classic				Conti GT	Remarks
					500	DS	BG	Chrome		
23	147271/b	Addon Lead	1	●	●	●	●	●		
24	582510/a	Neutral switch with Cable	1	●	●	●	●	●	●	

29 - 10 HEAD LAMP & PILOT LAMP

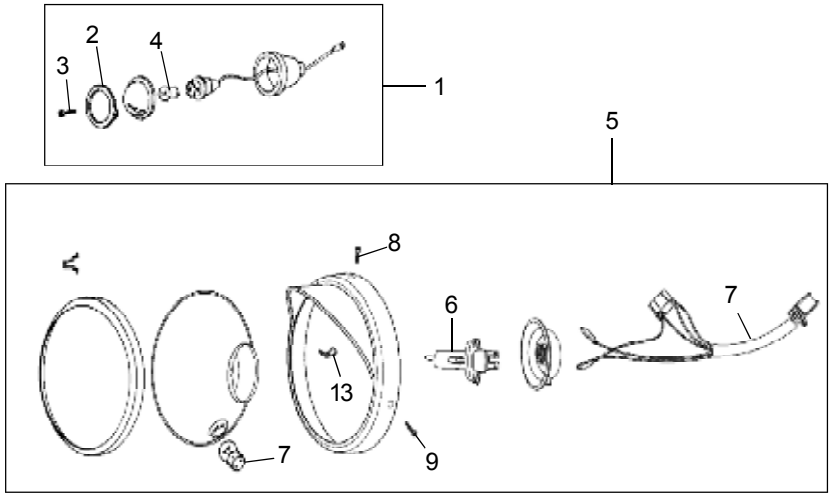

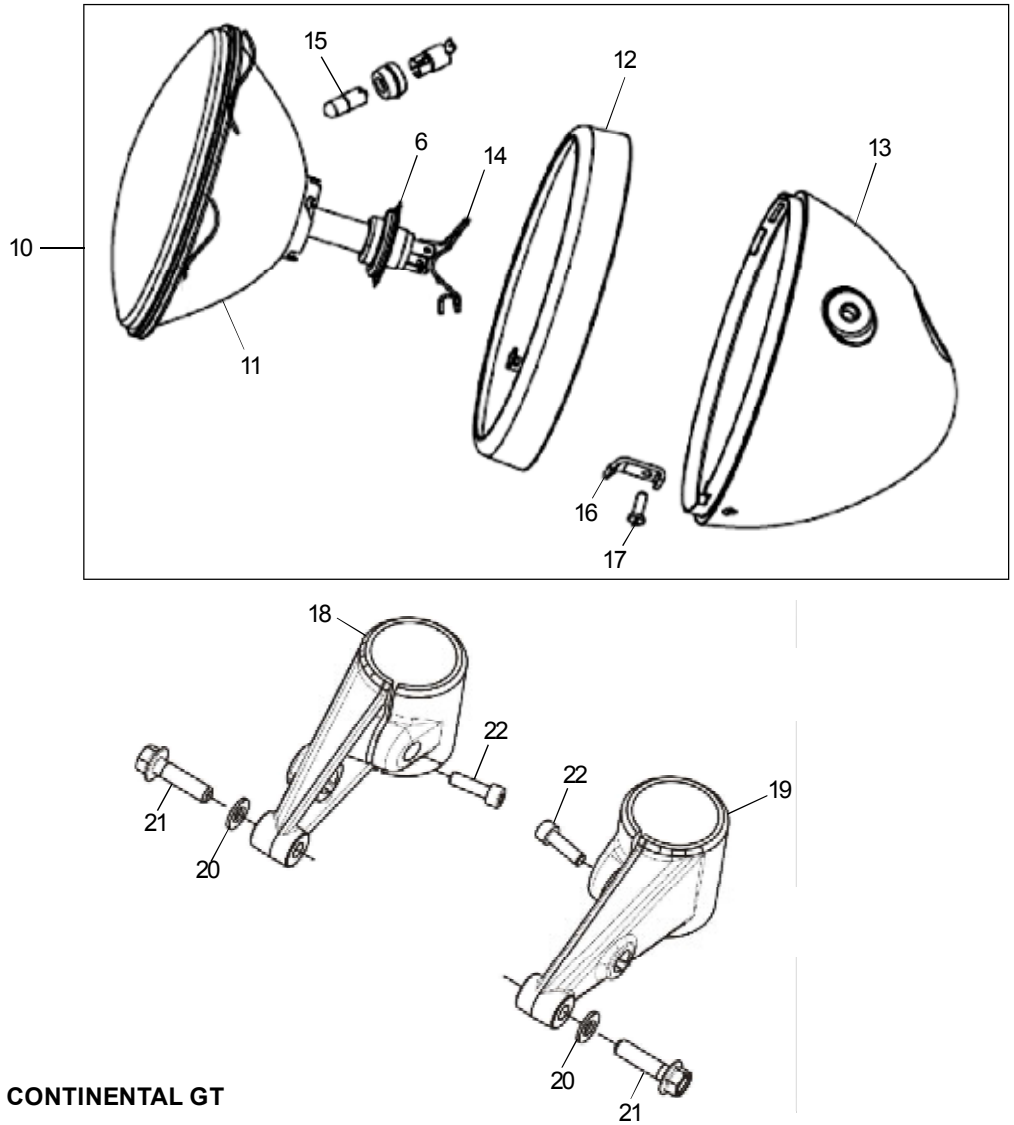

CONTINENTAL GT

29 - 10 HEAD LAMP & PILOT LAMP

Key No.	Part Number	Description	Qty	Bullet EFI	Classic				Conti GT	Remarks
					500	DS	BG	Chrome		
1	591873/a	Pilot Lamp With Bulb	2	●	●	●	●	●		
2	140732	Bulb	2	●	●	●	●	●		
3	145883/a	Screw Pilot Lamp Rim Fixing	2	●	●	●	●	●		
4	141715	Bulb 12V - 2W Ba 7S Cap	2	●	●	●	●	●		
5	591905/d	Head Lamp Assy. with Halogen Bulb LHT	1	●	●	●	●	●		For UK Only
	591906/b	Head Lamp Assy. with Halogen Bulb RHT	1	●	●	●	●	●		For Europe Only
6	146338	Head lamp Bulb 12V, 60 / 55W Halogen	1	●	●	●	●	●		
7	146456	Bulb 12V - 4W BA 7S Cap	1	●	●	●	●	●		
8	140743	Screw Rim Fixing Top with Clamp	1	●	●	●	●	●		
9	147491/a	Pan Head Screw M5 X 0.8 X 12	2	●	●	●	●	●		
10	585461/d	Head Lamp Assy. with Bulb	1						●	
11	585774/a	Lens and Reflector Assy	1						●	
12	585775/a	Rim Assy.	1						●	
13	585776/a	Housing Assy.	1						●	
14	585778/a	Bulb Holding Spring	1						●	
15	585779/a	Bulb 12V (T4W)	1						●	
16	585782/a	Housing Locating Bracket	1						●	
17	585783/a	Pan Head Screw	1						●	
18	585404/b	Head Lamp Holder RH	1						●	
19	585403/b	Head Lamp Holder LH	1						●	
20	593028/a	Washer	2						●	
21	593014/b	Flanged Hex. Bolt M8 X 30	2						●	
22	570030	Hex. Socket Head Cap Screw M6 X 20	2						●	

BULLET EFI & CLASSIC MODELS

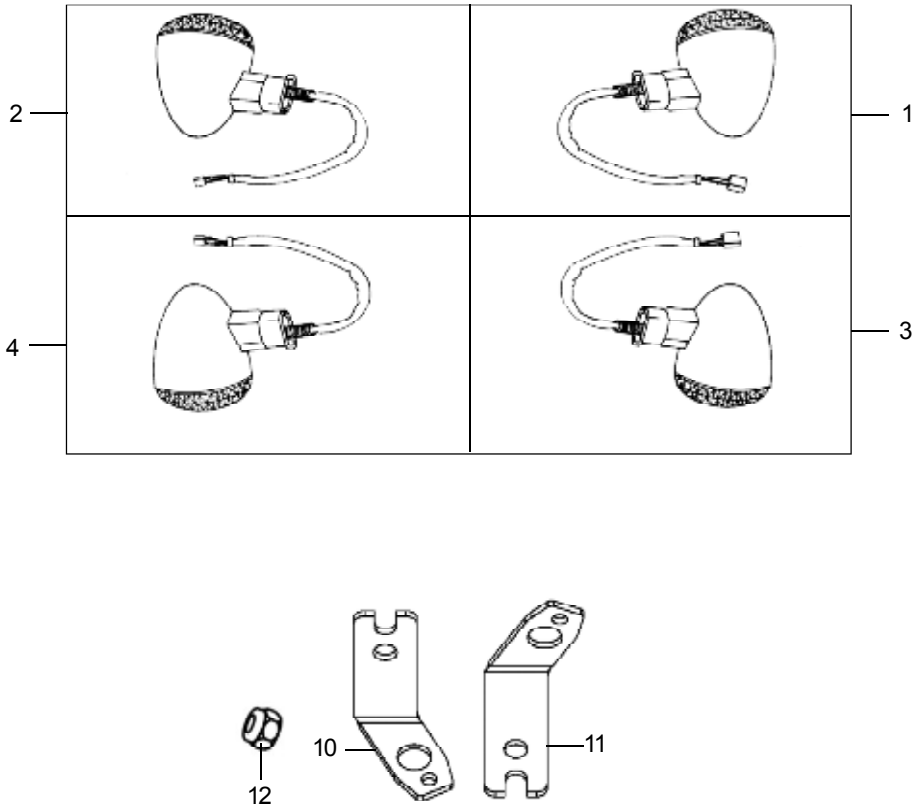

CONTINENTAL GT

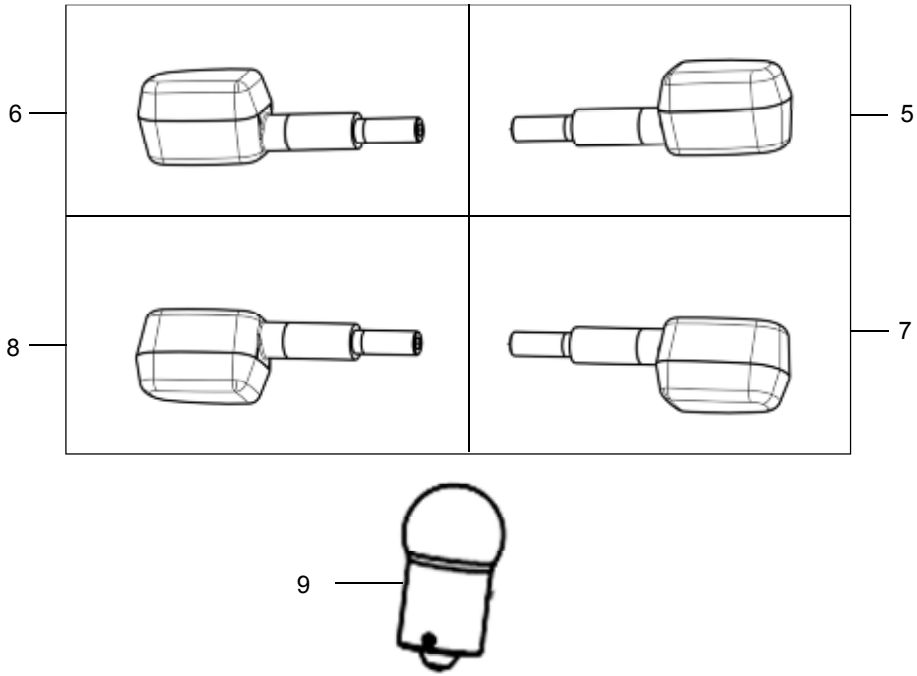

30 - 10 TRAFFICATOR LIGHTS

Key No.	Part Number	Description	Qty	Bullet EFI	Classic				Conti GT	Remarks
					500	DS	BG	Chrome		
1	591565/a	Trafficator Assy. - RH - Front	1	●	●	●	●	●		
2	591566/a	Trafficator Assy. - LH - Front	1	●	●	●	●	●		
3	591563/a	Trafficator Assy. - RH - Rear	1	●	●	●	●	●		
4	591564/a	Trafficator Assy. - LH - Rear	1	●	●	●	●	●		
5	585467/c	Trafficator Assy. - With Bulb - Front RH	1						●	
6	585468/c	Trafficator Assy. - With Bulb - Front LH	1						●	
7	585700/c	Trafficator Assy. - With Bulb - Rrear LH	1						●	
8	585701/c	Trafficator Assy. - With Bulb - Rear RH	1						●	
9	146348	Bulb 12V 10W	4	●	●	●	●	●		
	585786/a	Bulb 12V 10W	4						●	
10	592638/a	Bracket LH, Front - Black	1	●	●	●		●		
	825257	Bracket LH, Front - Battle Green	1				●			
11	592639/a	Bracket RH, Front - Black	1	●	●	●		●		
	825258	Bracket RH, Front - Battle Green	1				●			
12	586004/a	Nut, Nylock M8 X 9.5	2	●	●	●	●	●		

BULLET & CLASSIC MODELS

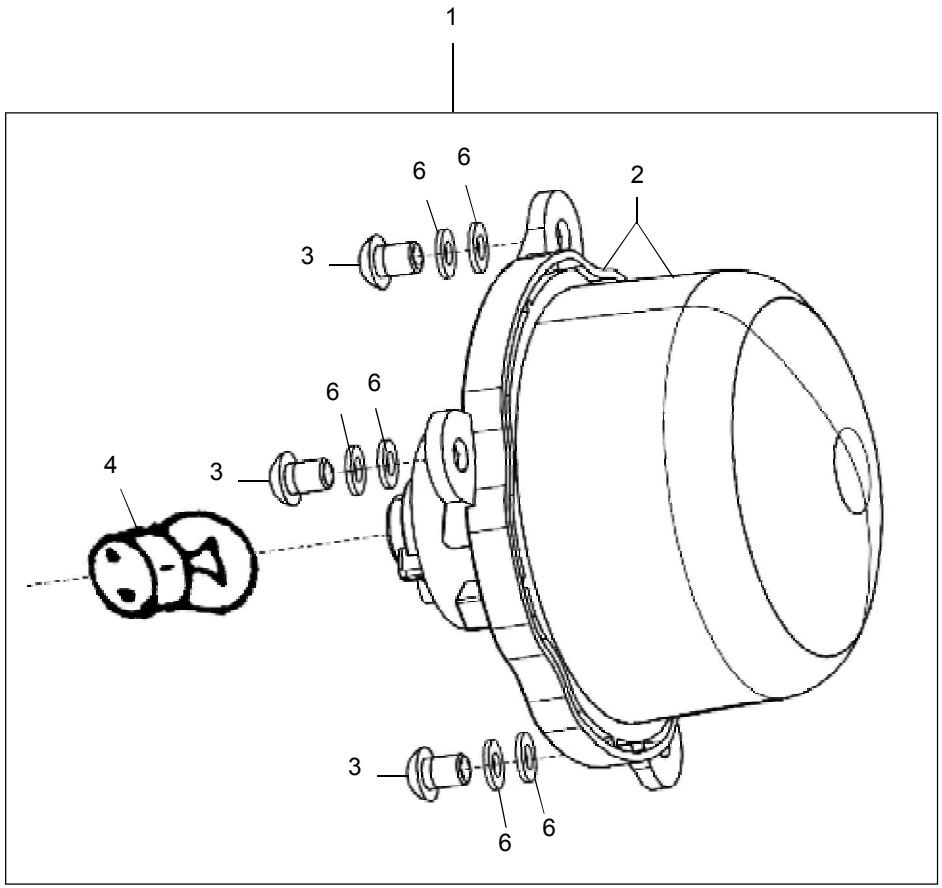

CONTINENTAL GT

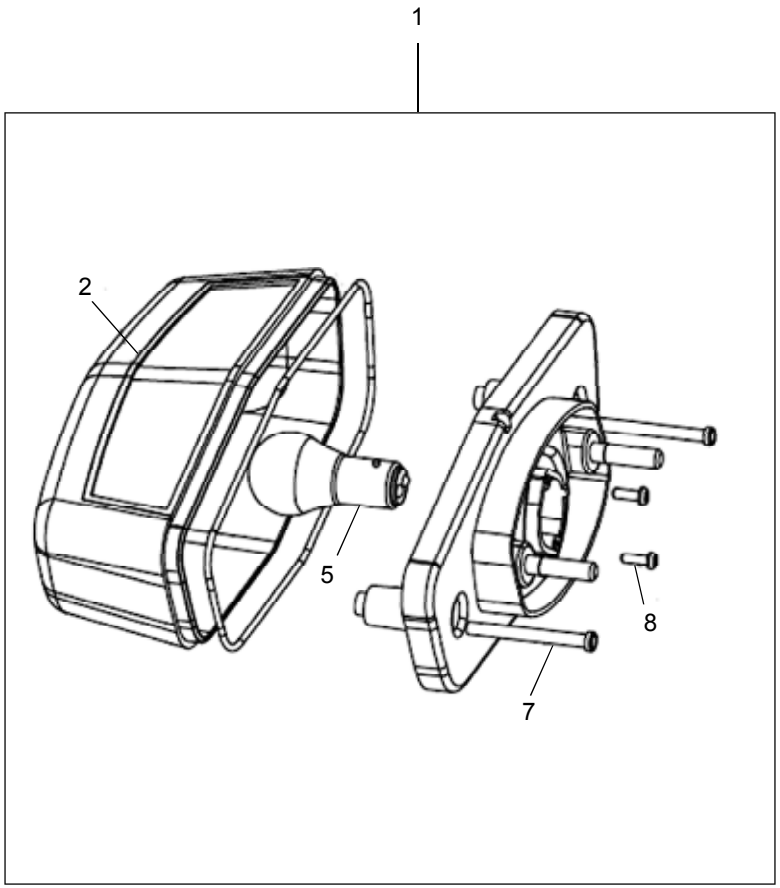

31 - 10 TAIL LAMP

Key No.	Part Number	Description	Qty	Bullet EFI	Classic				Conti GT	Remarks
					500	DS	BG	Chrome		
1	1010014/a	Tail Lamp	1	●	●	●	●	●		
	585086/c	Tail Lamp	1						●	
2	591216/A	Lens & Base Sealed, Classic	1	●	●	●	●	●		
	585788/C	Lens Complete - Tail Lamp	1						●	
3	145882/A	Cross Recessed Pan Head Screw M6 X 14	3	●	●	●	●	●		
4	591214/C	Bulb - Tail Lamp 12V, 21/5 W	1	●	●	●	●	●		
5	141718	Bulb 12V 21/5W - Tail Lamp	1						●	
6	586032/A	Plain Washer M6	6	●	●	●	●	●		
7	585792/A	Pan Head Tapping Screw - Tail Lamp	2						●	
8	585793/A	Tapping Screw - Tail Lamp	2						●	

1

32 - 10 TOOL KIT

Key No.	Part Number	Description	Qty	Bullet EFI	Classic				Conti GT	Remarks
					500	DS	BG	Chrome		
1	146500/a	Tool Kit	1	●	●	●	●	●		
	585400/B	Tool Kit	1						●	

33 - 10 PART NUMBER INDEX

Part No.	Page No.	Key No.
110179	159	2
110280	95	14
140129	123	17
140129	129	19
140129	151	4
140144	123	20
140508	93	5
140732	169	2
140743	169	8
141044	15	13
141044	21	10
141044	129	20
141060	45	11
141060	91	15
141060	147	6
141060	151	6
141093	151	2
141093	161	10
141715	169	4
141718	173	5
141862	93	7
142258	47	17
142274	19	15
142274	27	15
142274	117	11
142274	127	5
142274	145	4
142274	147	2
142274	149	6
142274	151	5
142274	165	21
142606	165	7
143407	157	11

Part No.	Page No.	Key No.
143747	123	15
143747	129	15
143885	95	11
143885	103	13
145143	157	12
146126	95	13
146338	169	6
146348	171	9
146375	37	10
146456	169	7
500355	159	10
500632	37	11
500632	135	18
500632	165	16
502071	165	6
521088	145	2
521199	17	25
521199	23	23
521199	33	22
521199	133	14
560013	161	4
560506	141	8
560632	71	24
560632	157	4
570013	161	13
570030	57	11
570030	69	5
570030	93	8
570030	141	16
570030	169	22
590551	127	1
594524	155	10
594525	155	10

Part No.	Page No.	Key No.
801275	75	6
801459	15	23
801459	23	21
801459	137	2
801527	17	29
801527	23	26
801528	17	30
801528	23	28
801529	109	11
801530	15	10
801530	23	25
801575	61	15
801580	133	1
801604	77	25
801618	21	1
801618	27	1
801619	137	8
801620	15	16
801620	19	4
801620	21	15
801620	27	4
806094	77	24
806102	77	25
806104	123	1
806109	127	1
806112	77	26
806127	89	1
806128	151	1
806129	49	1
806130	37	1
806134	89	1
806135	151	1
806136	49	1

Part No.	Page No.	Key No.
806137	37	1
818018	127	1
818032	89	1
818033	151	1
818035	49	1
818036	37	1
825178	21	6
825204	75	6
825257	171	10
825258	171	11
825316	99	15
825362	77	25
825374	23	21
825374	137	2
825379	133	1
825392	77	26
825404	77	24
825406	61	15
825493	89	2
825497	153	3
825504	129	13
825506	129	12
825509	127	3
825510	127	2
825513	89	3
825514	91	4
825539	127	1
825578	21	15
825578	27	4
825579	95	10
825580	89	1
825581	21	1
825581	27	1

Part No.	Page No.	Key No.
825583	151	1
825584	145	1
825586	115	1
825587	99	9
825588	99	18
825589	49	1
825590	37	1
825595	23	22
825595	133	7
825601	25	32
825601	27	9
825602	29	16
825602	109	8
825602	145	3
825624	23	26
825625	25	28
851032	149	7
851033	149	1
851034	53	2
855010	145	1
858012	89	2
858013	89	3
858014	89	4
858015	77	24
858017	153	3
858021	21	6
858026	77	25
858027	127	1
858029	127	3
858030	61	15
858031	75	6
858034	23	21
858034	137	2

Part No.	Page No.	Key No.
858035	133	1
858036	23	26
858037	23	28
858041	77	26
858042	127	2
858059	21	15
858059	27	4
858060	89	1
858061	21	1
858061	27	1
858062	137	8
858063	151	1
858064	145	1
858066	115	1
858067	49	1
858068	37	1
858072	23	22
858072	133	7
858074	25	32
858074	27	9
858075	29	16
858075	109	8
858075	145	3
859056	33	6
859057	33	7
859058	33	16
859059	35	31
859060	33	11
859061	133	8
859062	141	1
859063	141	A3
859065	141	14
859066	31	9

33 - 10 PART NUMBER INDEX

Part No.	Page No.	Key No.
859066	141	2
859067	141	A5
859068	143	21
859069	141	A6
859071	33	19
859071	141	17
859074	105	19
859075	97	10
866013	77	24
866067	89	2
866073	153	3
866083	123	13
866083	129	12
866084	123	12
866084	129	13
866094	127	3
866095	127	2
866097	89	3
866098	89	4
866133	123	1
866148	127	1
866149	77	26
866173	149	7
866174	149	1
866179	123	21
866180	123	2
866234	29	16
866243	89	1
866244	151	1
866245	145	1
866246	49	1
866247	37	1
866249	89	1

Part No.	Page No.	Key No.
866250	151	1
866251	49	1
866252	37	1
866253	53	2
866255	17	27
866255	23	22
866255	133	7
866258	89	1
866259	15	1
866259	19	1
866260	17	34
866260	19	9
866260	25	32
866260	27	9
866260	109	12
866261	151	1
866262	49	1
866263	37	1
866264	109	8
866264	145	3
867034	115	1
867059	125	29
867060	31	1
867060	33	1
867061	133	1
867069	149	4
868031	89	2
868044	145	1
873005	77	24
873009	23	21
873009	137	2
873014	133	1
873015	21	6

Part No.	Page No.	Key No.
873018	75	6
873023	61	15
873024	23	28
873036	89	2
873040	153	3
873045	77	26
873051	23	26
873056	77	25
873066	127	3
873067	127	2
873070	89	3
873071	91	4
873084	127	1
873105	21	15
873105	27	4
873106	89	1
873107	21	1
873107	27	1
873108	137	8
873109	151	1
873110	145	1
873112	115	1
873113	49	1
873114	37	1
873117	23	22
873117	133	7
873121	25	32
873121	27	9
873122	29	16
873122	109	8
873122	145	3
877005	149	7
877008	149	1

Part No.	Page No.	Key No.
877016	53	2
880005	77	25
880006	77	24
880027	123	1
880028	77	26
880043	127	1
880058	89	1
880059	151	1
880060	49	1
880061	37	1
880068	89	1
880069	151	1
880070	49	1
880071	37	1
881022	127	1
881038	89	1
881039	151	1
881040	49	1
881041	37	1
888040	81	A3
888041	81	A5
888044	81	A4
888079	115	A2
888118	97	A4
888128	69	A3
888136	85	A4
888147	115	A1
888147	117	A2
888151	99	A2
888151	103	A4
888266	69	A1
888270	93	A1
888272	97	A2

Part No.	Page No.	Key No.
888273	97	A3
888275	97	A5
888277	117	A1
888282	103	A5
888283	103	A3
888284	103	A2
888321	69	A2
888326	85	A3
888327	85	A5
891060	95	10
891061	99	9
891062	99	18
1020020	53	19
110116/b	75	10
110353/4	123	22
111686/a	15	8
111686/a	21	6
140129/a	31	3
140189/3	75	11
140193/b	77	22
140193/b	159	5
140196/d	75	19
140202/b	75	17
140206/5	75	15
140355/b	95	16
140355/b	99	16
140437/1	153	7
141051/a	35	25
141060/a	33	24
141061/1	131	19
141061/1	161	9
141061/2	31	13
141061/2	53	15

Part No.	Page No.	Key No.
141061/A	65	2
141061/a	165	2
141109/1	95	7
141109/1	97	7
141109/1	99	6
141109/1	103	7
141161/C	67	4
141161/c	155	13
141162/C	67	4
141162/c	155	12
141654/1	59	3
142274/a	43	6
142274/a	43	6
142274/b	31	4
142391/1	39	5
142532/b	91	11
143079/b	153	10
143275/b	131	10
143496/a	49	12
143496/a	53	10
143496/a	161	18
143746/a	83	26
143746/a	87	27
143818/1	75	14
143825/1	75	16
143885/a	99	12
143906/b	77	23
144471/a	99	17
144581/f	75	5
144582/f	15	2
144582/f	21	2
144582/f	75	4
144583/f	75	2

33 - 10 PART NUMBER INDEX

Part No.	Page No.	Key No.
144636/a	49	11
144636/a	53	11
144636/a	161	19
144766/a	133	5
144886/d	137	6
145103/a	33	21
145103/A	147	5
145186/c	133	6
145446/a	15	3
145446/a	25	35
145446/a	75	1
145543/B	125	23
145553/b	101	21
145553/b	105	22
145861/a	59	2
145882/A	65	3
145882/a	91	13
145882/A	123	5
145882/A	131	18
145882/A	149	8
145882/a	165	3
145882/A	173	3
145883/A	77	27
145883/a	169	3
146032/a	75	13
146134/c	153	4
146168/b	157	5
146173/c	165	11
146243/c	59	10
146318/a	43	12
146347/e	121	1
146499/a	103	10
146499/b	99	8

Part No.	Page No.	Key No.
146500/a	175	1
146610/a	75	12
147074/a	81	2
147076/a	83	21
147077/a	81	1
147078/a	81	12
147081/a	83	20
147082/a	81	15
147088/a	83	22
147090/a	81	13
147092/a	81	14
147271/b	67	17
147271/b	155	4
147271/b	167	23
147491/A	93	6
147491/a	169	9
147502/a	43	18
147507/a	95	15
147560/a	75	20
147561/a	75	18
147649/a	107	1
147652/b	95	5
147701/a	55	16
147770/e	159	1
147864/a	101	30
147864/a	105	31
147896/a	45	3
147896/A	117	13
147955/d	165	10
147956/a	155	6
147956/b	165	12
150324/a	95	8
150324/a	97	8

Part No.	Page No.	Key No.
150324/a	99	7
150324/a	103	8
170242/A	123	9
170242/A	129	10
170352/1	121	7
170399/A	119	26
500355/a	53	13
500632/a	43	5
500905/c	165	8
521088/B	149	3
521088/c	27	14
521112/B	149	2
521186/a	67	3
521186/a	69	11
521201/b	67	2
521202/a	67	1
540042/c	61	11
550141/a	137	16
550507/a	141	4
560058/b	153	5
560210/A	153	9
560521/b	95	9
560530/d	95	4
560546/b	97	4
560632/a	67	18
570013/a	41	19
570030/a	55	13
570263/b	19	21
570263/b	29	21
570281/a	143	26
570702/a	59	4
571004/f	101	28
571004/f	105	29

Part No.	Page No.	Key No.
571059/a	165	13
571156/c	73	3
571282/b	161	1
571292/b	45	7
571304/a	39	8
571304/a	161	12
572066/b	45	13
572075/a	45	2
572607/a	161	7
573106/b	45	6
573110/b	45	9
573127/b	45	2
573135/a	41	8
573135/b	57	2
573136/a	41	9
573138/a	41	10
573139/b	41	11
573141/a	41	12
573142/a	41	13
573143/a	41	14
573152/a	43	10
573161/a	41	1
573193/a	45	7
573205/a	41	8
573208/b	45	13
573211/a	45	10
573964/a	43	11
573977/a	43	17
576067/a	161	6
576110/a	43	8
576131/b	45	7
580037/H	115	4
580038/F	115	2

Part No.	Page No.	Key No.
580347/d	15	14
580347/d	19	2
580347/d	21	11
580347/d	27	2
580347/D	115	5
580380/a	137	12
580381/D	137	15
580396/a	165	17
580545/a	35	34
580749/D	115	3
581007/a	37	3
581008/a	37	4
581018/a	73	1
581029/b	67	11
581029/b	69	12
581029/b	157	3
581032/b	73	2
581053/d	51	16
581053/e	161	8
581054/b	163	21
581083/a	67	9
581083/a	67	10
581083/a	69	13
581098/a	67	8
581098/a	69	20
581341/a	159	1
581342/a	159	1
581690/a	49	6
581733/b	45	6
581738/A	135	17
582510/a	155	7
582510/a	167	24
582511/a	109	4

Part No.	Page No.	Key No.
582511/a	155	11
582512/a	155	9
582513/a	155	9
582518/a	77	28
582526/a	43	10
582528/a	43	14
582544/a	165	20
582591/a	45	16
582638/a	45	14
582784/a	59	1
583866/b	15	24
583866/b	21	13
583866/B	133	9
583951/a	61	12
583957/b	107	12
584065/a	75	3
584065/a	79	7
584624/d	159	1
585003/b	79	11
585012/d	143	19
585016/b	103	11
585019/A	65	1
585024/b	97	6
585025/a	111	1
585027/a	69	18
585027/a	111	6
585029/c	69	7
585031/a	69	17
585040/a	69	1
585041/a	69	2
585042/a	79	2
585042/c	69	6
585044/b	79	10

33 - 10 PART NUMBER INDEX

Part No.	Page No.	Key No.
585047/k	117	1
585061/a	53	14
585065/B	65	1
585066/B	65	4
585067/B	65	5
585068/B	65	6
585083/A	121	2
585084/b	131	1
585086/c	173	1
585087/b	131	3
585089/a	85	3
585150/b	143	25
585175/a	85	13
585176/a	85	15
585179/a	97	12
585180/A	31	16
585205/c	111	12
585206/c	111	4
585207/c	111	3
585208/c	111	7
585209/B	117	9
585210/c	111	10
585211/b	97	5
585216/b	99	2
585216/b	103	5
585217/b	83	27
585217/b	87	28
585217/b	109	9
585217/b	113	11
585217/b	161	14
585218/c	113	8
585220/a	85	A1
585221/b	119	29

Part No.	Page No.	Key No.
585226/a	85	16
585248/c	141	6
585249/e	141	5
585252/d	141	7
585265/e	31	6
585276/b	33	2
585287/b	111	A1
585287/b	113	A1
585288/c	141	A2
585294/e	35	27
585300/a	103	17
585301/b	99	11
585301/b	103	9
585302/b	99	10
585302/b	103	12
585304/b	103	16
585305/b	103	15
585309/b	103	14
585311/b	105	20
585312/a	103	3
585313/a	105	25
585315/b	105	24
585316/b	103	1
585320/a	111	19
585321/a	97	A1
585326/b	97	11
585328/a	103	18
585328/b	97	16
585329/c	97	13
585330/c	97	14
585334/c	97	17
585341/a	103	A1
585343/a	111	13

Part No.	Page No.	Key No.
585344/a	111	14
585353/b	79	6
585355/c	79	8
585356/a	79	5
585357/a	79	9
585362/b	93	1
585363/b	93	3
585366/a	103	6
585369/A	117	2
585373/a	85	4
585374/b	131	4
585390/c	159	3
585394/a	55	14
585394/b	57	9
585394/b	109	6
585394/b	113	7
585395/a	55	12
585395/b	57	10
585395/b	109	5
585395/b	113	6
585400/B	175	2
585403/b	169	19
585404/b	169	18
585410/A	65	1
585413/a	69	16
585423/a	69	10
585428/A	141	11
585429/a	33	13
585436/a	69	8
585456/a	53	17
585459/b	71	25
585459/b	155	4
585460/a	71	23

Part No.	Page No.	Key No.
585461/d	169	10
585463/c	157	1
585464/b	155	3
585465/c	53	16
585465/c	161	8
585467/c	171	5
585468/c	171	6
585469/A	141	18
585476/a	69	14
585478/a	97	15
585480/A	121	8
585506/a	137	8
585507/a	141	10
585509/b	141	15
585510/f	143	24
585512/c	141	12
585514/c	97	9
585530/b	111	11
585538/c	45	12
585557/b	131	2
585561/a	79	12
585580/a	33	17
585580/A	141	A4
585581/a	31	11
585581/a	141	A1
585582/a	143	20
585600/b	93	2
585603/a	69	9
585606/a	35	28
585614/a	31	10
585614/a	33	18
585620/a	73	1
585640/B	117	3

Part No.	Page No.	Key No.
585641/A	117	18
585643/A	117	4
585644/A	117	5
585645/B	117	8
585655/a	35	33
585659/a	53	5
585662/A	147	1
585666/A	93	4
585673/a	155	5
585677/A	119	27
585678/A	119	25
585681/a	165	9
585683/A	117	19
585700/c	131	8
585700/c	171	7
585701/c	131	9
585701/c	171	8
585702/a	131	5
585708/a	159	3
585751/A	117	6
585753/A	117	7
585767/A	133	10
585774/a	169	11
585775/a	169	12
585776/a	169	13
585778/a	169	14
585779/a	169	15
585782/a	169	16
585783/a	169	17
585786/a	171	9
585788/C	173	2
585792/A	173	7
585796/A	159	8

Part No.	Page No.	Key No.
585793/A	173	8
585797/a	159	9
585808/a	31	12
585808/a	33	10
585809/b	31	8
585809/b	33	20
585811/a	131	6
585812/a	69	4
585818/A	121	9
585829/A	117	21
585833/a	105	27
585977/a	131	7
585980/A	159	11
586002/a	15	6
586002/a	21	5
586002/a	59	5
586002/A	123	3
586002/a	131	11
586002/a	157	9
586002/a	157	9
586003/a	19	14
586003/A	123	11
586003/A	129	17
586003/A	133	13
586003/a	145	5
586004/a	15	18
586004/a	19	6
586004/a	23	18
586004/a	27	6
586004/a	33	4
586004/a	37	5
586004/a	45	15
586004/a	59	6

33 - 10 PART NUMBER INDEX

Part No.	Page No.	Key No.
586004/a	61	4
586004/a	63	19
586004/a	75	8
586004/A	123	4
586004/A	127	7
586004/a	131	12
586004/A	135	16
586004/a	171	12
586004/a	19	20
586004/a	29	20
586005/a	59	7
586005/a	75	7
586005/A	115	16
586005/A	117	17
586008/a	17	32
586008/a	19	10
586008/a	25	31
586008/a	27	10
586008/a	33	3
586008/A	115	6
586008/A	125	24
586009/a	101	25
586009/a	105	26
586014/a	45	4
586014/a	45	4
586014/a	45	4
586015/a	133	2
586016/a	133	3
586017/a	133	4
586021/a	37	9
586021/a	63	22
586021/A	123	7
586021/A	129	16

Part No.	Page No.	Key No.
586021/A	131	17
586021/a	131	20
586022/a	61	9
586022/A	127	8
586022/a	153	8
586023/a	69	15
586023/A	127	6
586024/a	19	23
586024/a	29	23
586024/a	61	7
586025/a	63	21
586025/a	153	6
586029/a	15	9
586029/a	21	7
586029/a	91	8
586029/A	123	16
586029/A	129	22
586029/A	131	15
586031/a	37	16
586031/a	87	26
586031/A	91	7
586031/A	131	13
586032/a	37	14
586032/a	63	20
586032/a	87	25
586032/a	91	14
586032/A	117	10
586032/A	123	6
586032/A	127	4
586032/a	131	14
586032/A	143	22
586032/A	147	4
586032/A	149	5

Part No.	Page No.	Key No.
586032/A	151	7
586032/a	163	22
586032/A	173	6
586032/b	31	2
586033/a	125	26
586035/a	15	12
586035/a	21	9
586035/a	37	8
586035/A	123	19
586035/A	129	21
586035/A	145	6
586035/A	147	3
586035/A	151	3
586036/a	15	19
586036/a	19	7
586036/a	23	19
586036/a	27	7
586036/a	33	5
586036/a	59	9
586036/a	61	10
586036/A	135	15
586036/a	157	10
586037/a	39	11
586038/a	61	6
586038/a	63	20
586038/a	141	9
586042/a	109	7
586042/a	113	5
586042/a	119	30
586042/a	131	21
586045/a	141	13
586048/a	109	3
586055/a	59	8

Part No.	Page No.	Key No.
586056/a	19	22
586056/a	29	22
586070/a	95	19
586082/a	137	3
586085/a	95	20
586085/a	97	1
586085/a	101	27
586085/a	105	28
586111/a	91	9
586111/a	113	9
586164/A	135	17
586164/e	165	22
587336/a	107	9
587336/b	111	9
587356/b	165	1
587377/a	51	14
587377/a	53	8
587377/a	161	16
587379/a	161	2
587384/a	39	3
587384/a	41	4
587384/a	161	11
587385/a	43	2
587385/a	165	14
587605/b	99	1
587605/b	103	4
587627/b	113	1
587649/a	49	10
587649/a	95	1
590006/b	99	13
590271/a	67	6
590272/a	67	7
590431/a	159	1

Part No.	Page No.	Key No.
590797/a	125	25
590827/a	67	12
590827/a	69	19
590827/a	157	2
590830/A	67	A1
590831/A	67	A1
590906/c	35	30
590906/c	141	3
590906/c	161	20
590906/c	161	20
590913/a	73	3
590998/B	151	9
591023/A	123	10
591023/A	129	11
591029/e	61	13
591058/e	49	3
591059/e	49	8
591066/f	61	1
591073/a	15	15
591073/a	19	3
591073/a	21	12
591073/a	27	3
591077/f	61	14
591099/A	123	14
591099/A	129	14
591197/c	63	23
591210/a	99	15
591214/C	173	4
591216/A	173	2
591352/A	151	8
591389/a	33	9
591415/a	61	8
591418/b	61	5

Part No.	Page No.	Key No.
591421/a	61	3
591423/a	61	2
591425/A	137	1
591428/B	137	7
591434/a	159	7
591462/a	35	32
591462/a	75	9
591470/a	39	10
591493/A	37	11
591512/a	81	16
591513/a	81	17
591521/a	67	13
591521/a	69	21
591522/A	67	14
591522/a	71	22
591534/a	33	15
591560/c	155	3
591563/a	171	3
591564/a	171	4
591565/a	171	1
591566/a	171	2
591577/a	63	17
591577/a	165	4
591577/b	31	14
591577/b	49	4
591577/b	53	4
591578/a	35	26
591578/a	43	16
591578/a	45	5
591578/a	61	16
591587/a	155	9
591608/a	61	10
591634/a	55	3

33 - 10 PART NUMBER INDEX

Part No.	Page No.	Key No.
591634/a	57	16
591643/a	55	11
591643/a	57	12
591667/D	115	12
591671/C	37	13
591681/c	39	14
591692/e	153	1
591700/b	55	7
591700/b	57	7
591701/b	55	9
591701/b	57	18
591702/a	37	10
591702/a	87	24
591825/a	81	19
591826/a	81	9
591827/a	81	8
591828/a	81	7
591865/a	45	8
591873/a	169	1
591905/d	169	5
591906/b	169	5
591976/a	39	6
591980/a	157	5
591981/a	157	7
591984/a	99	14
591991/B	133	11
591992/b	17	26
591992/b	21	14
591992/B	133	11
591993/c	67	5
591998/c	49	2
591998/c	53	1
591999/a	55	8

Part No.	Page No.	Key No.
591999/a	57	19
592030/A	123	8
592030/A	127	9
592099/g	159	1
592509/a	45	9
592595/a	153	3
592630/b	95	18
592638/a	171	10
592639/a	171	11
592663/a	159	6
592857/a	67	16
593001/d	95	3
593004/a	83	24
593005/A	119	28
593005/A	125	28
593008/b	45	1
593010/c	15	7
593010/c	23	27
593010/c	19	17
593010/c	29	17
593011/c	15	4
593011/c	21	3
593011/C	133	12
593011/c	19	19
593011/c	29	19
593012/A	151	3
593014/b	169	21
593020/b	15	22
593020/b	23	20
593021/b	15	21
593021/b	25	36
593022/c	15	17
593022/c	19	5

Part No.	Page No.	Key No.
593022/c	23	17
593022/c	27	5
593024/d	17	36
593024/d	19	11
593024/d	25	34
593024/d	27	11
593024/D	117	20
593028/a	169	20
593028/b	33	23
593029/d	63	18
593030/b	83	23
593031/e	61	1
593033/a	61	9
593033/A	127	8
593046/A	119	23
593046/a	121	5
593046/a	121	5
593049/c	17	28
593049/c	23	24
593050/c	17	33
593050/c	19	13
593050/c	25	30
593050/c	27	13
593050/C	115	7
593056/a	61	6
593056/a	91	10
593060/c	17	31
593060/c	25	29
593060/c	33	8
593061/c	17	35
593061/c	19	12
593061/c	25	33
593061/c	27	12

Part No.	Page No.	Key No.
593061/c	33	14
593062/c	95	6
593062/c	97	3
593067/b	19	18
593067/b	29	18
593095/a	97	2
593095/a	101	26
593095/a	103	2
593108/A	115	11
593109/A	117	22
593109/a	121	6
593110/b	121	3
593113/b	121	4
593130/d	61	14
593144/a	83	25
593163/a	15	5
593163/a	21	4
593178/a	89	3
593179/a	91	4
593191/a	75	21
593192/A	133	14
593223/B	133	9
593232/a	31	7
593232/a	91	6
593232/a	153	11
593234/b	91	5
593235/a	105	30
593236/a	101	29
593277/a	157	1
593990/a	81	11
593991/a	81	18
593992/a	81	5
593993/a	81	10

Part No.	Page No.	Key No.
593994/a	81	6
594009/b	137	14
594046/a	83	28
594046/a	111	20
594046/A	131	16
594046/a	161	15
594046/b	87	29
594046/b	109	10
594046/b	109	13
594046/b	113	10
594048/b	101	19
594050/c	99	5
594051/a	101	24
594055/b	107	11
594057/a	111	15
594067/c	137	9
594078/b	87	23
594087/a	101	23
594088/a	99	3
594215/a	69	3
594215/a	79	3
594216/B	115	14
594216/B	117	14
594228/b	157	6
594233/a	87	22
594238/b	97	18
594264/b	49	7
594264/b	53	6
594268/b	51	17
594268/b	53	3
594286/a	79	1
594287/a	79	4
594332/b	157	8

Part No.	Page No.	Key No.
594365/A	115	15
594365/A	117	16
594372/b	137	11
594404/a	85	5
594405/a	85	6
594406/a	85	7
594407/a	85	8
594408/a	85	9
594409/a	85	10
594410/a	85	11
594411/a	85	12
594413/a	85	14
594416/a	85	17
594418/a	85	18
594419/a	85	19
594429/a	111	21
594430/a	111	22
594447/B	137	13
594484/C	115	10
594493/B	119	24
594504/a	111	16
594505/a	111	17
594506/a	111	18
594507/a	111	5
594507/b	107	5
594508/a	107	2
594508/a	111	2
594533/A	115	13
594533/A	117	15
594537/A	143	23
594538/a	49	5
594540/A	115	8
594545/a	31	15

33 - 10 PART NUMBER INDEX

Part No.	Page No.	Key No.
594545/a	33	12
594552/a	87	20
594553/a	87	21
594562/a	101	22
594562/a	105	23
594631/a	107	6
594660/a	35	29
594660/A	115	9
594711/a	67	15
594817/A	117	12
594833/A	125	27
594851/a	101	20
594851/a	105	21
1010009/a	43	15
1010013/a	165	5
1010014/a	173	1
1010022/a	165	5
1010024/a	43	1
1010025/B	99	A1
1010029/c	95	A1
1010030/b	95	12
1010031/c	95	2
1010032/a	109	14
1010032/B	107	A1
1010032/B	109	A1
1010033/b	107	4
1010034/b	107	3
1010035/a	107	7
1010036/b	107	10
1010037/a	81	A1
1010038/a	81	4
1010038/a	85	2
1010048/c	15	20

Part No.	Page No.	Key No.
1010048/c	19	8
1010048/c	23	16
1010048/c	27	8
1010048/c	55	15
1010050/a	55	10
1010050/a	57	8
1010057/b	137	5
1010058/b	137	4
1010060/A	137	17
1010063/b	15	11
1010063/b	21	8
1010063/B	123	18
1010063/B	129	18
1010065/d	155	1
1010066/a	159	4
1010083/a	43	9
1010084/a	161	5
1010088/a	51	15
1010088/a	53	7
1010088/a	161	17
1010093/c	99	4
1010095/a	161	3
1010096/a	43	7
1010096/c	165	15
1010098/b	49	13
1010100/b	53	9
1010114/a	81	A2
1010115/a	81	3
1010116/a	85	A2
1010124/a	43	3
1010124/a	165	19
1010125/a	43	4
1010125/a	165	18

Part No.	Page No.	Key No.
1010127/a	85	1
1010129/B	155	5
1010130/a	43	9
1010132/A	137	10
1010135/a	159	12
1010136/a	165	10
1010139/a	95	17
1010140/a	43	1
1010145/a	41	A1
1010147/b	113	4
1010149/a	153	2
1010149/b	31	5
1010150/b	155	8
1010159/a	161	1
1010162/a	57	13
1010163/a	57	17
1010164/a	57	4
1010165/a	57	14
1010166/a	57	6
1010167/a	57	15
1010168/a	55	17
1010169/a	55	1
1010170/a	55	5
1010171/a	55	2
1010172/a	55	4
1010175/a	55	6
1010175/a	57	3
1010177/b	57	1
1010178/b	113	3
1010179/b	113	2
1010180/a	109	2
1010180/c	91	12
1010183/a	109	1

Part No.	Page No.	Key No.
1010184/a	57	5
1010190/a	145	3
1010190/b	19	16
1010190/B	109	8
1010200/A	139	19
1010201/A	137	18
1010255/a	107	8
1010255/a	111	8
1010318/A	95	A1
1010319/A	99	A1
1010320/a	159	4
1010321/a	159	4
1010367/a	155	1
1010368/a	155	2
1020008/a	43	13
1020016/a	51	20
1020016/a	53	20
1020017/a	51	18
1020017/a	53	18
1020018/a	51	19
1020019/a	49	9
1020021/a	53	12
1020024/a	161	2
1020030/a	43	13

Part No.	Page No.	Key No.

Part No.	Page No.	Key No.

33 - 10 PART NUMBER INDEX

Part No.	Page No.	Key No.

Part No.	Page No.	Key No.

Part No.	Page No.	Key No.

Part No.	Page No.	Key No.

Part No.	Page No.	Key No.

Part No.	Page No.	Key No.

ROYAL ENFIELD